Technical Documentation

APH1/585-841

Advantage Plus IEEE 841 | AEHH8B

Date: June 26, 2020

TECO Westinghouse MOTORS (CANADA) INC.	
	Date: June 26, 2020

Dimensional Drawing

Catalogue	Model	HP	Pole	kW	Rating	Voltage	Hz	RPM
APH1/585-841	AEHH8B	1.5	8	1.1	Continuous	575	60	900

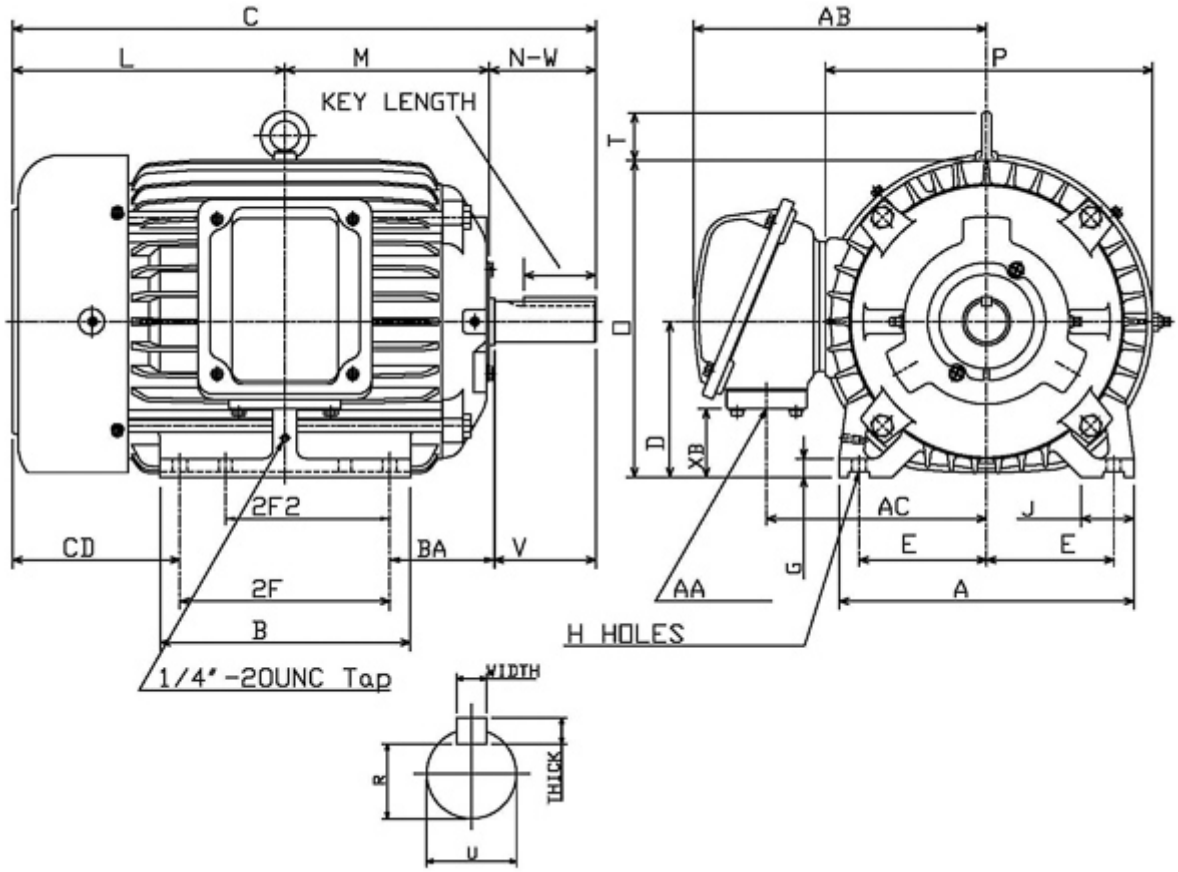

Frame Size	Mounting					A	B	C	CD	D
	E	2F	2F2	H	BA					
184T	3.75	5.5	4.5	0.41	2.75	8.82	6.89	15.91		4.5

G	J	K	L	M	O	P	T	Key			Keyseat
								Width	Thick	Length	R
0.65	1.75		7.66	5.37	9.17	9.61	1.3	0.25	0.25	1.78	0.986

Terminal Housing				Aux Box		C/D Flange					
AA	AB	AC	XB	AE	AX	BB	AH	AK	BD	AJ	BF
NPT3/4"	8.31	6.38	1.86								

Shaft Extension			Bearings		Approx. Weight Lbs	SPL dBA/3ft	Ins. Class	S.F.	Drive Method	Dimensions
N-W	U	V	DE	NDE						
2.75	1.125	2.7	6306ZC3	6306ZC3	92	51	F	1.15	Direct Coupling / Belt Drive	Inches

TECO Westinghouse MOTORS (CANADA) INC.	
	Date: June 26, 2020

Technical Data Sheet

Motor Type: AEHH8B	Catalogue No: APH1/585-841

Nameplate Information

HP	Pole	RPM	Frame	Voltage	Hz	Phase
1.5	8	860	184T	575	60	3
Enclosure	Ins. Class	Service Factor	Time Rating	NEMA Design	Rated Amb.	Rated Altitude
TEFC	F	1.15	Continuous	B	-40 to 40 °C	<1000 m

Typical Performance

Efficiency (%)				Power Factor (%)		
Full Load		3/4 Load	1/2 Load	Full Load	3/4 Load	1/2 Load
Nom.	Min.					
77.0	74.0	75.5	70.0	60.5	51.5	39.5
Torque				Current (A)		
Full Load (lb-ft)	Locked Rotor (% FLT)	Pull Up (% FLT)	Break Down (% FLT)	No Load	Full Load	Locked Rotor
9.16	185	130	250	2.0	2.4	16
NEMA KVA Code	Inertia (WR^2)			Safe Stall Time (s)		Noise Level Sound Press. dB(A)
	Rotor ($lb\text{-}ft^2$)	NEMA Load ($lb\text{-}ft^2$)	Max. Allowable ($lb\text{-}ft^2$)	Cold	Hot	
M	0.275	45.00	144.00	60	42	51

VFD Duty Information

Speed Range			VFD		S.F.
Constant Torque	Variable Torque	Constant Power	Carrier	Type	
6-60Hz	3-60Hz	60-120Hz	≤ 5 kHz	VPWM or CPWM	1.0 Only

Hazardous Locations Information

CSA Certified	
Class I, Div 2, Groups B, C & D Class I, Zone 2, Groups IIB+H2, IIB & IIA	
Temp Code (Sinewave / VFD)	T3A / T3A

Additional Certifications

Other Certification

Additional Information

Bearings		Approx. Weight
DE	NDE	lbs
6306ZC3	6306ZC3	92

TECO Westinghouse MOTORS (CANADA) INC.	
	Date: June 26, 2020

Nameplate Drawing

Advantage Plus IEEE 841

TYPE	AEHH8B	CAT. NO.	APH1/585-841		
OUTPUT	1.5 HP 1.1 kW	FRAME	184T	TEFC	
R.P.M.	860	POLE	8	INS.	F
VOLTS	575	PHASE	3	Hz	60
AMPS	2.4	CODE	M	S.F.	1.15
AMBIENT	40 °C	NOM. EFF. 77.0		MIN. EFF. 74.0	
BEARINGS	6306ZC3 / 6306ZC3			RATING Cont.	

SER. NO.	TBD	DESIGN	B	WT. 92 LBS

PWM VFD DUTY	VT	CT	CP	S.F.
	3-60Hz	6-60Hz	60-120Hz	1.0 Only

Connection Diagram

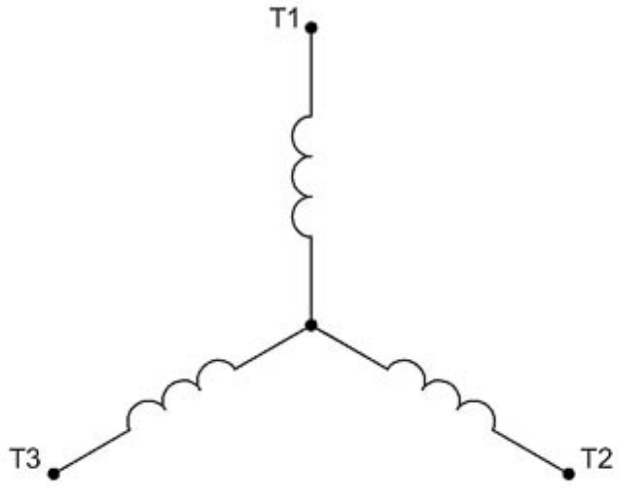

3 LEAD SINGLE VOLTAGE WYE					
VOLTAGE	CONN.	L1	L2	L3	
-	WYE	1	2	3	

WD_3Y

TECO Westinghouse MOTORS (CANADA) INC.	
	Date: June 26, 2020

Thermal Limit Curves

Motor Type: AEHH8B		Catalogue No: APH1/585-841		Family: Advantage Plus IEEE 841	
HP	1.5	Safe Stall Time		Full Load A	2.4 A
Voltage	575V 60Hz	Hot	42 s	% Inrush	664 %
RPM	900	Cold	60 s	Locked Rotor A	16 A

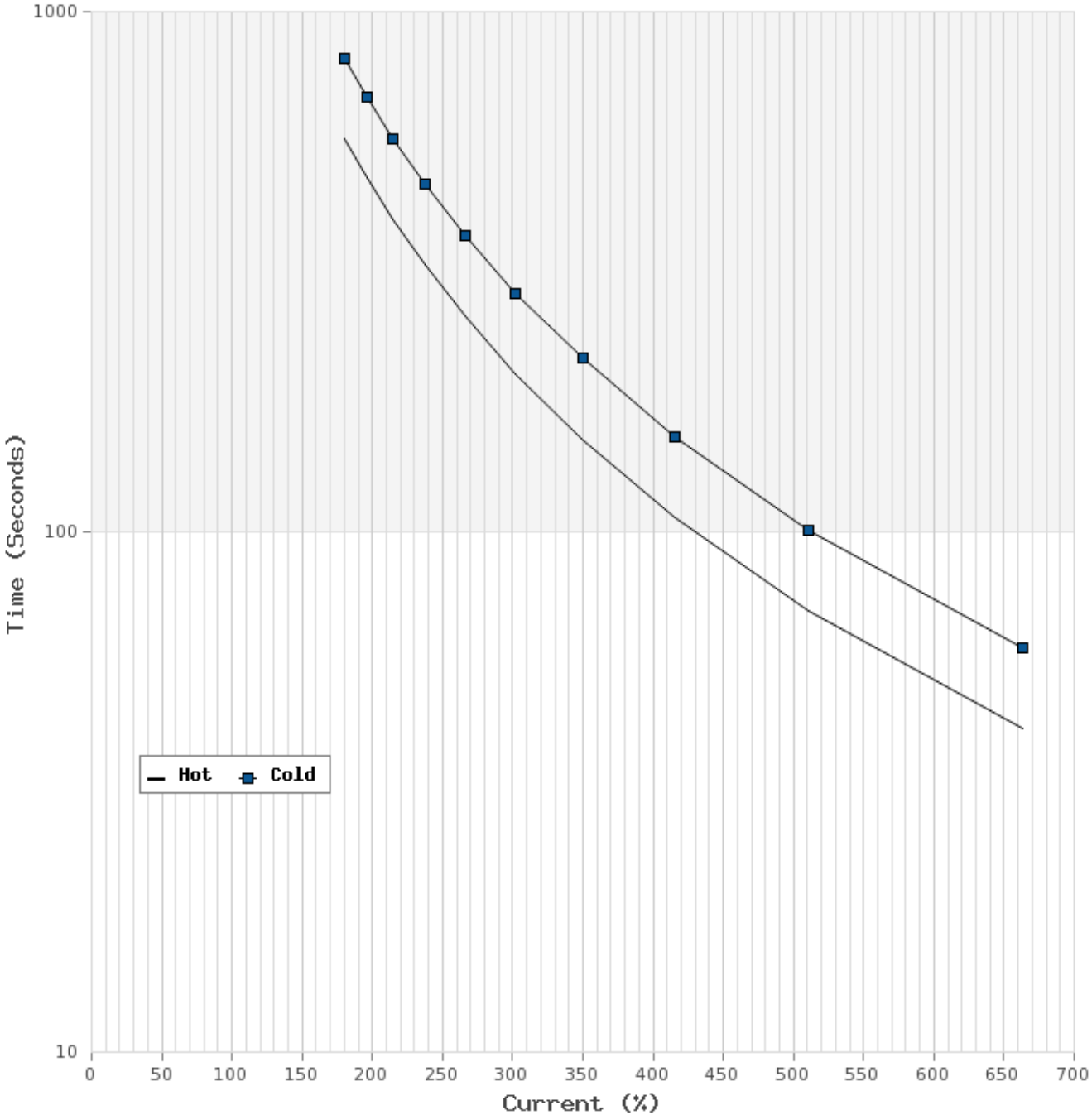

TECO Westinghouse MOTORS (CANADA) INC.	
	Date: June 26, 2020

T-N and I-N Curves
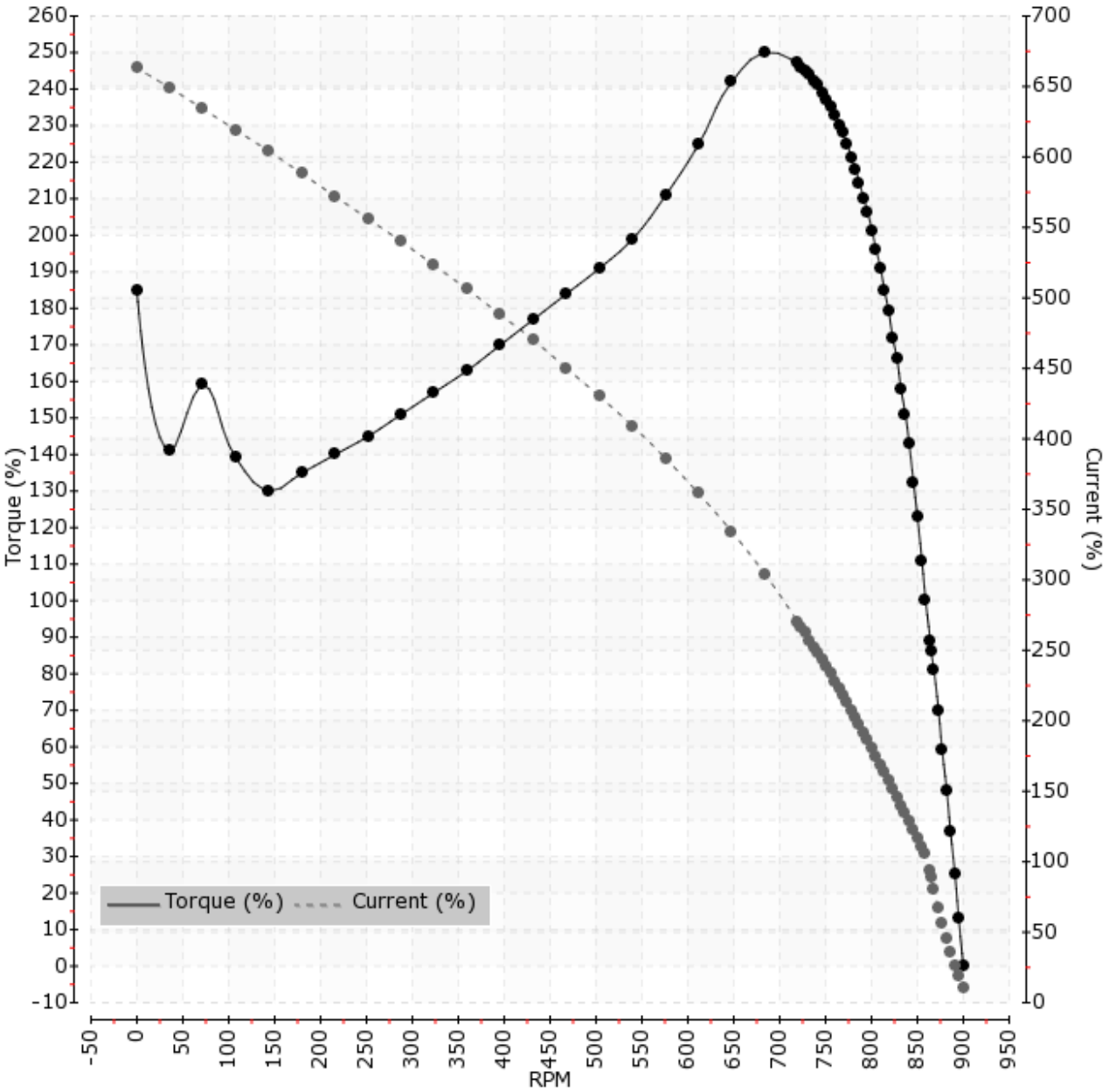
Motor Type: AEHH8B		Catalogue No: APH1/585-841		Family: Advantage Plus IEEE 841	
HP	1.5	Full Load T	9.16 lb-ft	Full Load A	2.4 A
Voltage	575V 60Hz	Locked Rotor T	185 %	Locked Rotor A	16.0 A
RPM	900	Pull Up T	130 %	Break Down T	250 %