Technical Documentation

SDP03045

Optim ODP | ASHH

Date: December 1, 2016

TECO Westinghouse MOTORS (CANADA) INC.	
	Date: December 1, 2016

Dimensional Drawing

Catalogue	Model	HP	Pole	kW	Rating	Voltage	Hz	RPM
SDP03045	ASHH	30	4	22.38	Continuous	575 V	60	1800

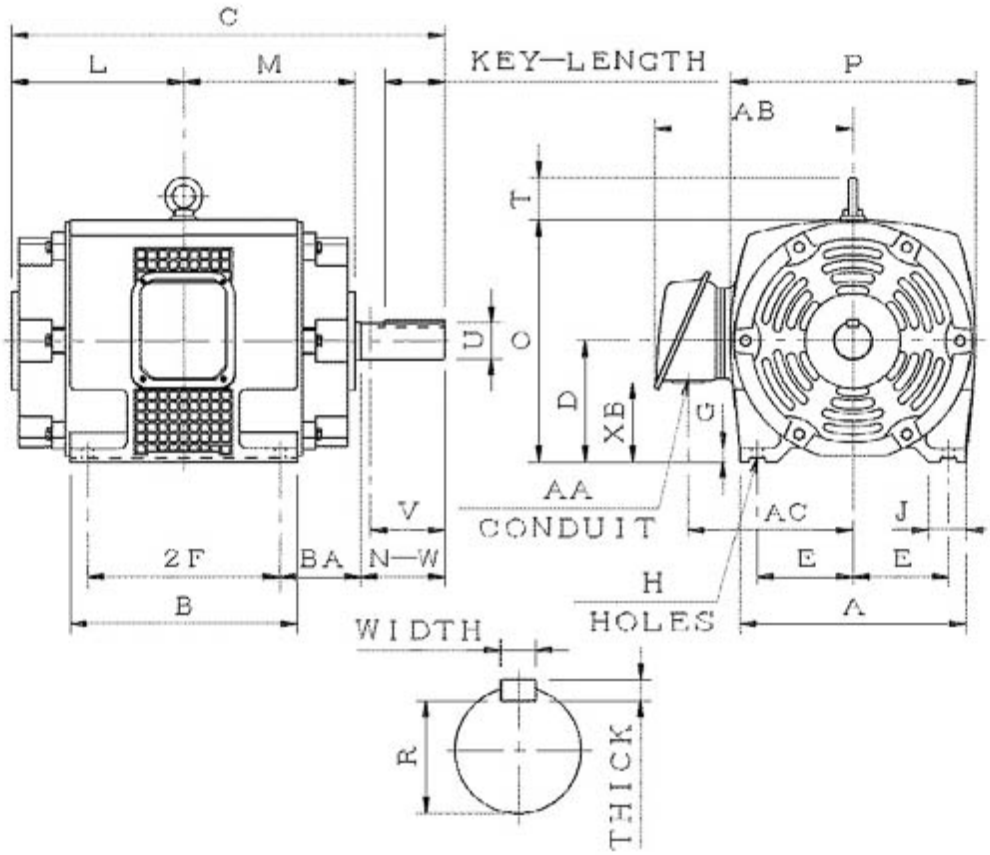

ASHH-SMP-3

Frame Size	Mounting					A	B	C	CD	D
	E	2F	2F2	H	BA					
286T	5.5	11		0.53	4.75	14	13.2	24.38		7

G	J	K	L	M	O	P	T	Key			Keyseat
								Width	Thick	Length	R
0.7	2.95		9.51	9.51	14.2	14.55	2.35	0.5	0.5	3.28	1.591

Terminal Housing				Aux Box		C/D Flange					
AA	AB	AC	XB	AE	AX	BB	AH	AK	BD	AJ	BF
2.05	12.08	9.84	4.6								

Shaft Extension			Bearings		Approx. Weight Lbs	SPL dBA/3ft	Ins. Class	S.F.	Drive Method	Dimensions
N-W	U	V	DE	NDE						
4.62	1.875	4.5	6311ZZ	6310ZZ	397	66	F	1.15	Direct Coupling / Belt Drive	Inches

TECO Westinghouse MOTORS (CANADA) INC.	
	Date: December 1, 2016

Technical Data Sheet

Motor Type: ASHH	Catalogue No: SDP03045

Nameplate Information

HP	Pole	RPM	Frame	Voltage	Hz	Phase
30	4	1770	286T	575	60	3
Enclosure	Ins. Class	Service Factor	Time Rating	NEMA Design	Rated Amb.	Rated Altitude
ODP	F	1.15	Continuous	C	-40 to 40 °C	<3300 ft

Typical Performance

Efficiency (%)				Power Factor (%)		
Full Load		3/4 Load	1/2 Load	Full Load	3/4 Load	1/2 Load
Nom.	Min.					
94.1	93.0	94.5	94.5	87.0	84.5	77.5
Torque				Current (A)		
Full Load (lb-ft)	Locked Rotor (% FLT)	Pull Up (% FLT)	Break Down (% FLT)	No Load	Full Load	Locked Rotor
88.99	225	185	245	7.9	27.5	174
NEMA KVA Code	Inertia (WR^2)			Safe Stall Time (s)		Noise Level Sound Press. dB(A)
	Rotor ($lb\text{-}ft^2$)	NEMA Load ($lb\text{-}ft^2$)	Max. Allowable ($lb\text{-}ft^2$)	Cold	Hot	
G	4.425	144	202	17	12	66

VFD Duty Information

Speed Range			VFD		S.F.
Constant Torque	Variable Torque	Constant Power	Carrier	Type	
6-60Hz	3-60Hz	60-120Hz	≤ 5 kHz	VPWM or CPWM	1.0 Only

Additional Information

Bearings		Approx. Weight
DE	NDE	lbs
6311ZZ	6310ZZ	397

Hazardous Locations Information

N/A	
0 0	
Temp Code (Sinewave / VFD)	0 / 0

Connection Diagram

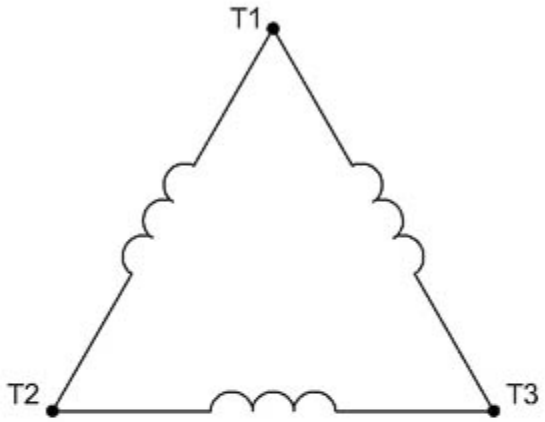

3 LEAD SINGLE VOLTAGE DELTA					
VOLTAGE	CONN.	L1	L2	L3	
-	DELTA	1	2	3	

WD_3D

TECO Westinghouse MOTORS (CANADA) INC.	
	Date: December 1, 2016

Thermal Limit Curves

Motor Type: ASHH		Catalogue No: SDP03045		Family: Optim ODP	
HP	30	Safe Stall Time		Full Load A	0.0 / 27.5 A
Voltage	0 / 575V 60Hz	Hot	12 s	Locked Rotor A	634 %
RPM	1800	Cold	17 s	Locked Rotor A	0.0 / 174 A

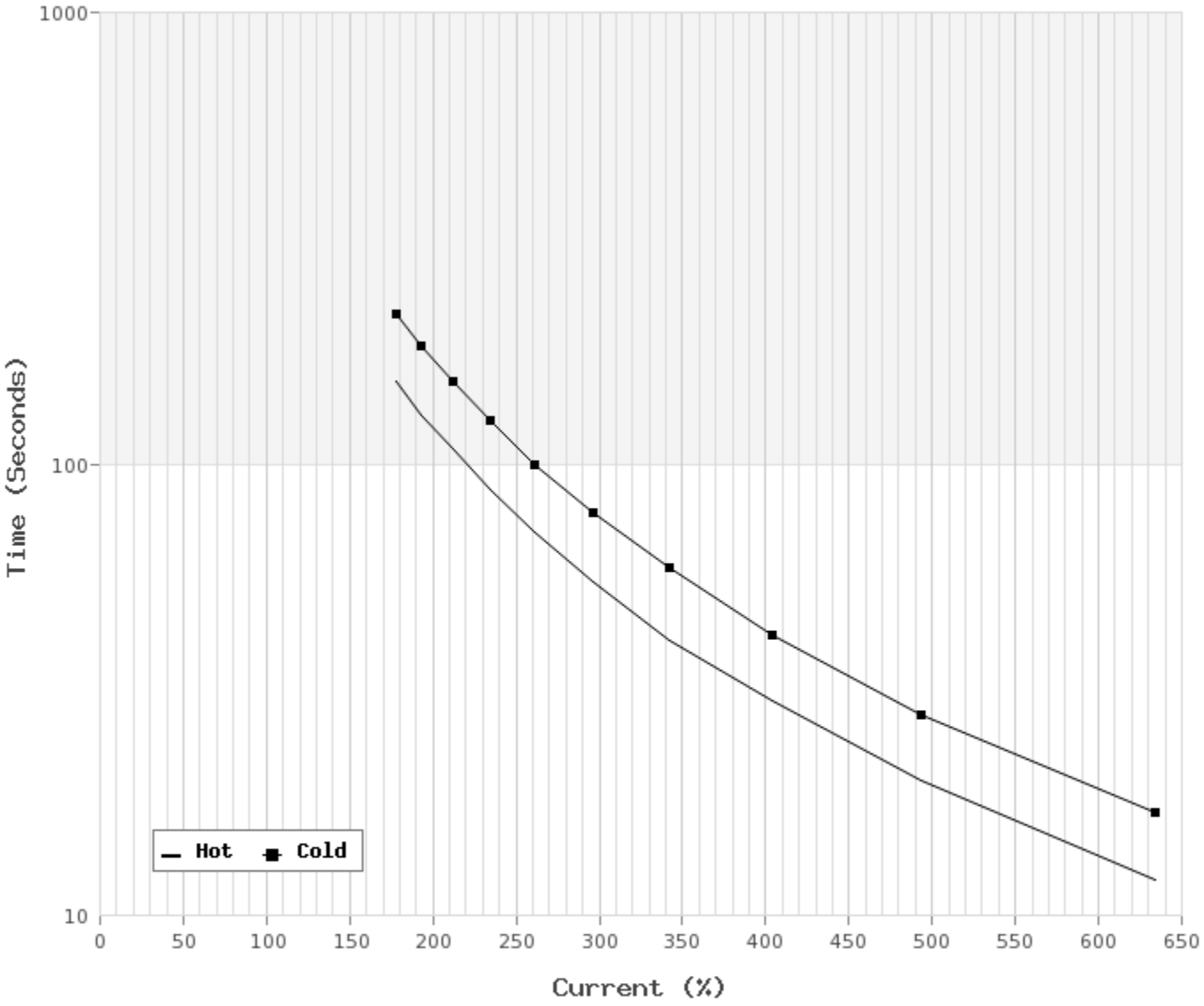

TECO Westinghouse MOTORS (CANADA) INC.	
	Date: December 1, 2016

T-N and I-N Curves
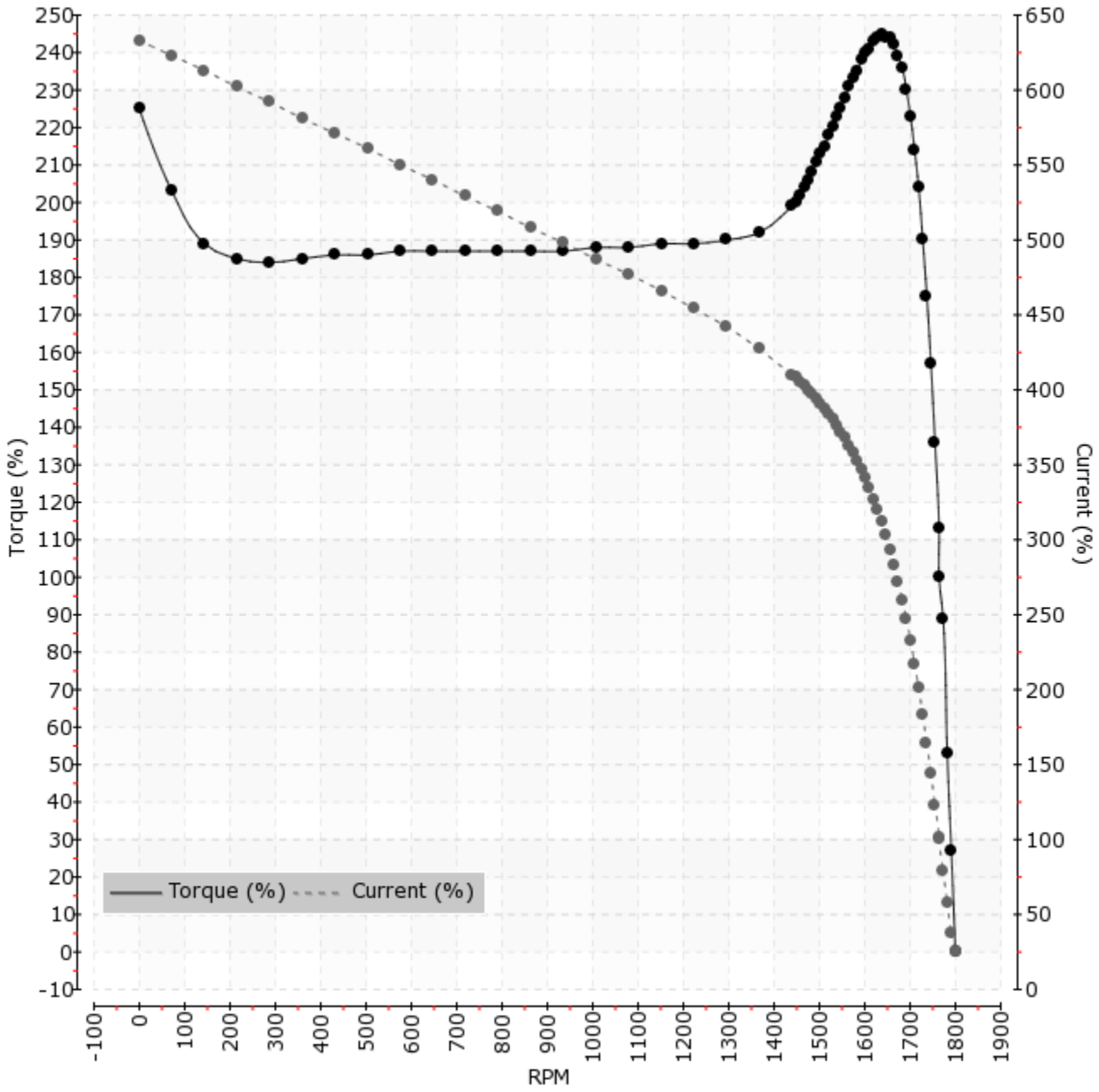
Motor Type: ASHH		Catalogue No: SDP03045		Family: Optim ODP	
HP	30	Full Load T	88.99 lb-ft	Full Load A	27.5 A
Voltage	575V 60Hz	Locked Rotor T	225 %	Locked Rotor A	174.0 A
RPM	1800	Pull Up T	185 %	Break Down T	245 %