Technical Documentation

APH0254-841

Advantage Plus IEEE 841 | AEHH8B

Date: June 26, 2020

TECO Westinghouse MOTORS (CANADA) INC.	
	Date: June 26, 2020

Dimensional Drawing

Catalogue	Model	HP	Pole	kW	Rating	Voltage	Hz	RPM
APH0254-841	AEHH8B	25	4	19	Continuous	460	60	1800

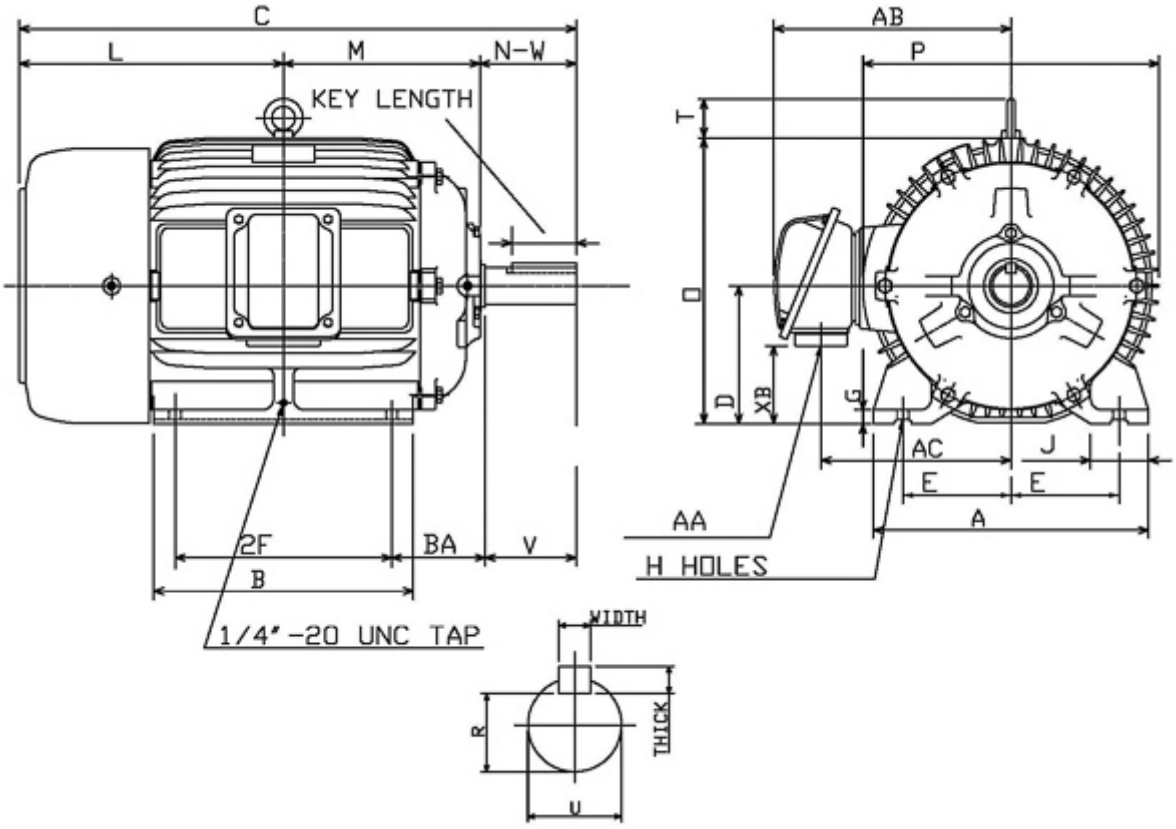

Frame Size	Mounting					A	B	C	CD	D
	E	2F	2F2	H	BA					
284T	5.5	9.5		0.53	4.75	13.98	11.69	26.8		7

G	J	K	L	M	O	P	T	Key			Keyseat
								Width	Thick	Length	R
0.7	2.95		12.68	9.23	14.5	15.05	2.36	0.5	0.5	3.28	1.591

Terminal Housing				Aux Box		C/D Flange					
AA	AB	AC	XB	AE	AX	BB	AH	AK	BD	AJ	BF
NPT11/2"	13.27	10.35	3.54								

Shaft Extension			Bearings		Approx. Weight Lbs	SPL dBA/3ft	Ins. Class	S.F.	Drive Method	Dimensions
N-W	U	V	DE	NDE						
4.62	1.875	4.5	6311ZC3	6310ZC3	464	68	F	1.15	Direct Coupling / Belt Drive	Inches

TECO Westinghouse MOTORS (CANADA) INC.	
	Date: June 26, 2020

Technical Data Sheet

Motor Type: AEHH8B	Catalogue No: APH0254-841

Nameplate Information

HP	Pole	RPM	Frame	Voltage	Hz	Phase
25	4	1765	284T	460	60	3
Enclosure	Ins. Class	Service Factor	Time Rating	NEMA Design	Rated Amb.	Rated Altitude
TEFC	F	1.15	Continuous	B	-40 to 40 °C	<1000 m

Typical Performance

Efficiency (%)				Power Factor (%)		
Full Load		3/4 Load	1/2 Load	Full Load	3/4 Load	1/2 Load
Nom.	Min.					
93.6	92.4	93.6	93.6	86.0	83.0	77.0
Torque				Current (A)		
Full Load (lb-ft)	Locked Rotor (% FLT)	Pull Up (% FLT)	Break Down (% FLT)	No Load	Full Load	Locked Rotor
74.37	205	165	240	7.1	29.1	183
NEMA KVA Code	Inertia (WR^2)			Safe Stall Time (s)		Noise Level Sound Press. dB(A)
	Rotor ($lb\text{-}ft^2$)	NEMA Load ($lb\text{-}ft^2$)	Max. Allowable ($lb\text{-}ft^2$)	Cold	Hot	
G	4.586	122.00	255.00	28	20	68

VFD Duty Information

Speed Range			VFD		S.F.
Constant Torque	Variable Torque	Constant Power	Carrier	Type	
6-60Hz	3-60Hz	60-90Hz	≤ 5 kHz	VPWM or CPWM	1.0 Only

Hazardous Locations Information

CSA Certified	
Class I, Div 2, Groups B, C & D Class I, Zone 2, Groups IIB+H2, IIB & IIA	
Temp Code (Sinewave / VFD)	T3C / T3B

Additional Certifications

Other Certification

Additional Information

Bearings		Approx. Weight
DE	NDE	lbs
6311ZC3	6310ZC3	464

Nameplate Drawing

Advantage Plus IEEE 841

TYPE	AEHH8B	CAT. NO.	APH0254-841		
OUTPUT	25 HP 19 kW	FRAME	284T	TEFC	
R.P.M.	1765	POLE	4	INS.	F
VOLTS	460	PHASE	3	Hz	60
AMPS	29.1	CODE	G	S.F.	1.15
AMBIENT	40 °C	NOM. EFF. 93.6		MIN. EFF. 92.4	
BEARINGS	6311ZC3 / 6310ZC3			RATING Cont.	

SER. NO.	TBD	DESIGN	B	WT. 464 LBS

PWM VFD DUTY	VT	CT	CP	S.F.
	3-60Hz	6-60Hz	60-90Hz	1.0 Only

Connection Diagram

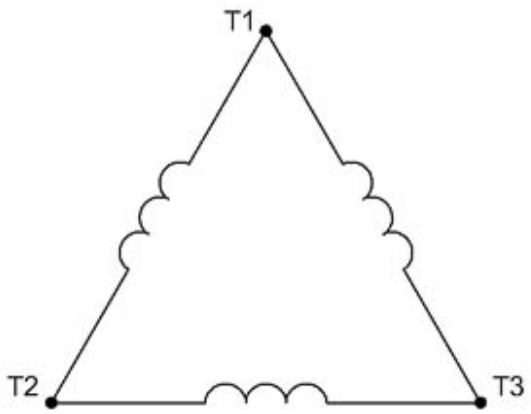

3 LEAD SINGLE VOLTAGE DELTA					
VOLTAGE	CONN.	L1	L2	L3	
-	DELTA	1	2	3	

WD_3D

TECO Westinghouse MOTORS (CANADA) INC.	
	Date: June 26, 2020

Thermal Limit Curves

Motor Type: AEHH8B		Catalogue No: APH0254-841		Family: Advantage Plus IEEE 841	
HP	25	Safe Stall Time		Full Load A	29.1 A
Voltage	460V 60Hz	Hot	20 s	% Inrush	629 %
RPM	1800	Cold	28 s	Locked Rotor A	183 A

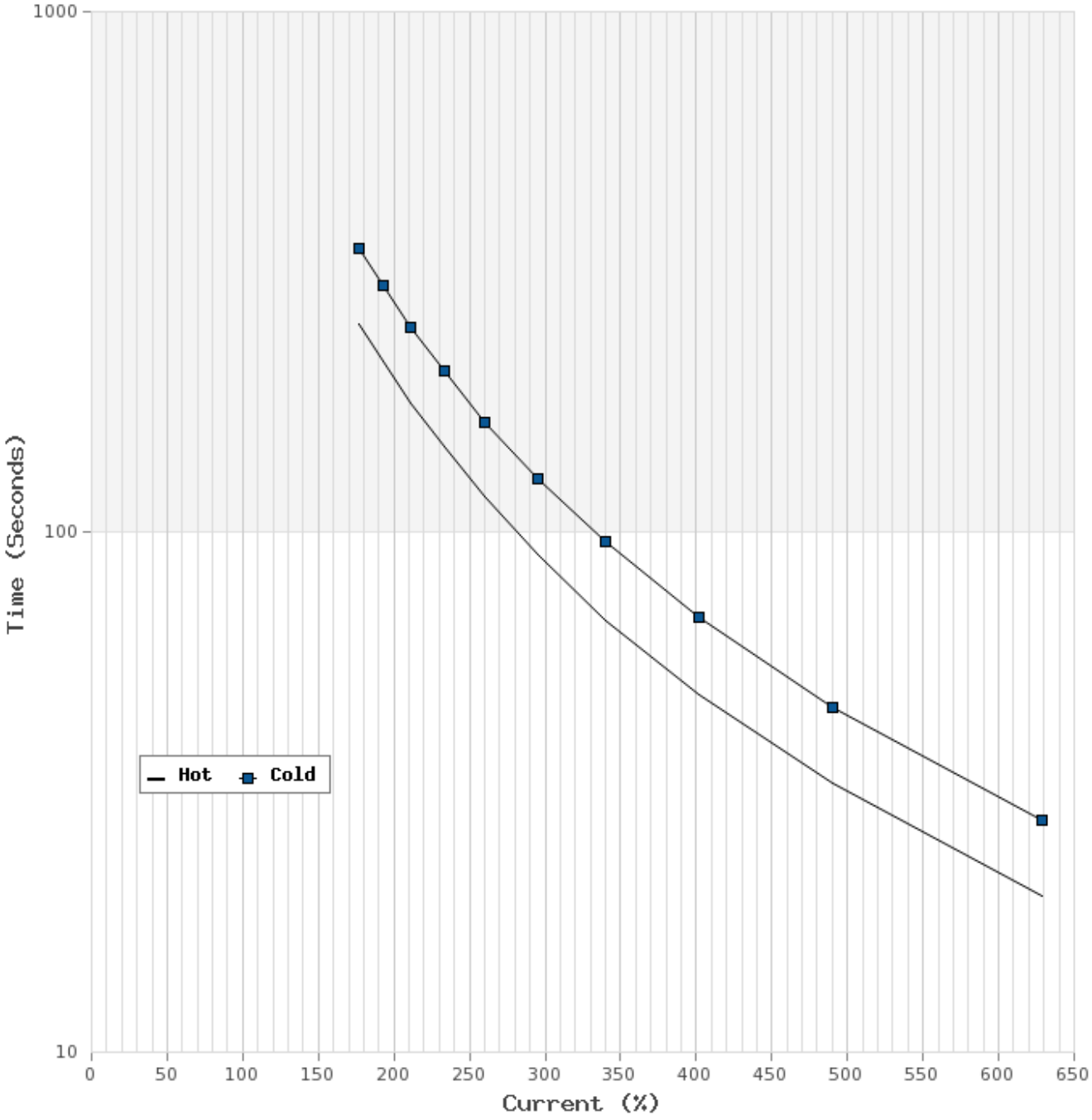

TECO Westinghouse MOTORS (CANADA) INC.	
	Date: June 26, 2020

T-N and I-N Curves
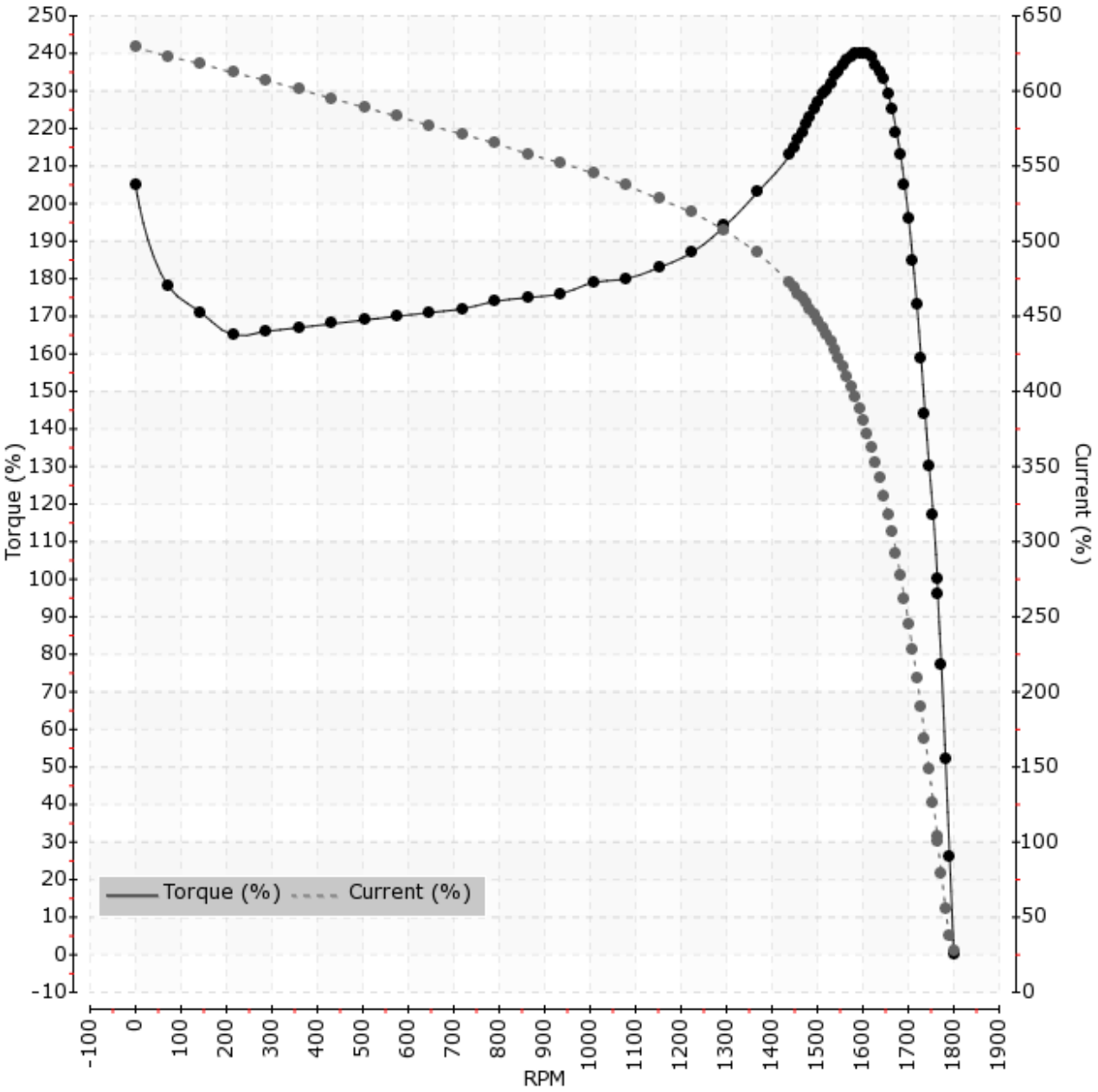
Motor Type: AEHH8B		Catalogue No: APH0254-841		Family: Advantage Plus IEEE 841	
HP	25	Full Load T	74.37 lb-ft	Full Load A	29.1 A
Voltage	460V 60Hz	Locked Rotor T	205 %	Locked Rotor A	183.0 A
RPM	1800	Pull Up T	165 %	Break Down T	240 %