Technical Documentation

APH0206-841

Advantage Plus IEEE 841 | AEHH8B

Date: June 26, 2020

TECO Westinghouse MOTORS (CANADA) INC.	
	Date: June 26, 2020

Dimensional Drawing

Catalogue	Model	HP	Pole	kW	Rating	Voltage	Hz	RPM
APH0206-841	AEHH8B	20	6	15	Continuous	460	60	1200

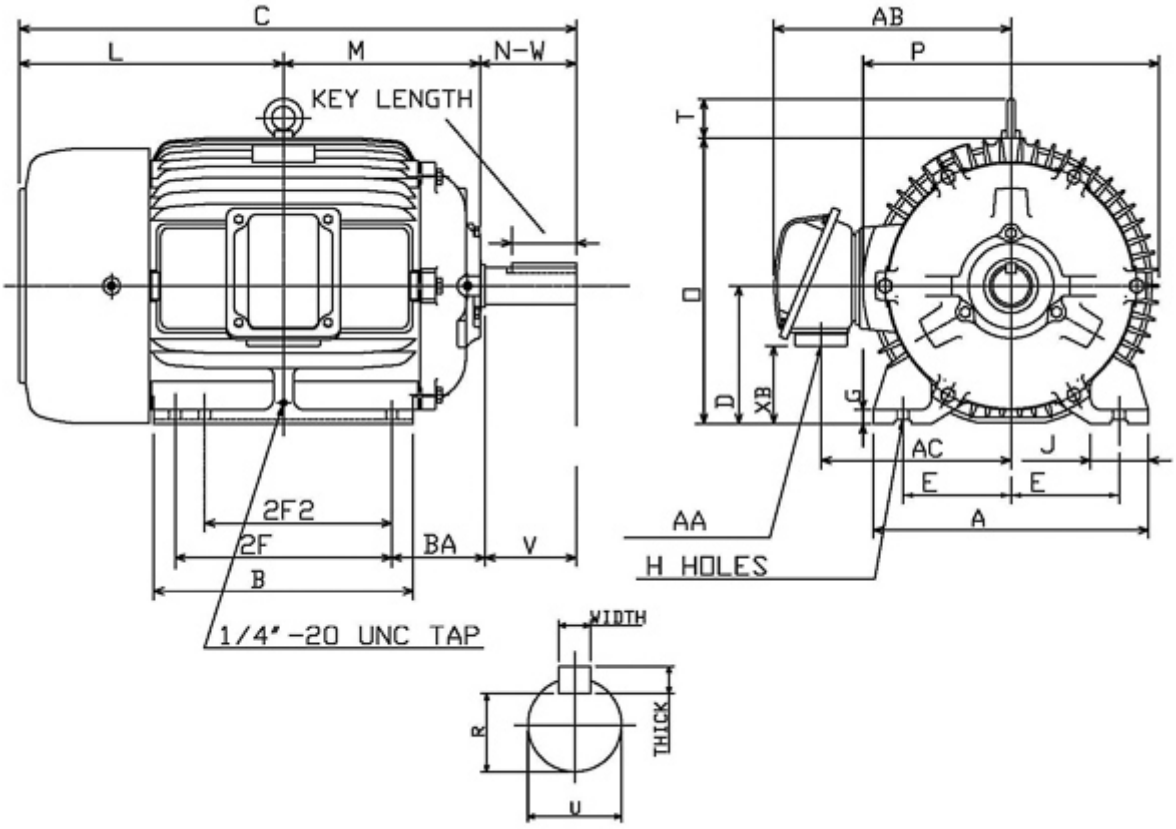

Frame Size	Mounting					A	B	C	CD	D
	E	2F	2F2	H	BA					
286T	5.5	11	9.5	0.53	4.75	13.98	13.19	28.3		7

G	J	K	L	M	O	P	T	Key			Keyseat
								Width	Thick	Length	R
0.7	2.95		13.43	9.98	14.5	15.05	2.36	0.5	0.5	3.28	1.591

Terminal Housing				Aux Box		C/D Flange					
AA	AB	AC	XB	AE	AX	BB	AH	AK	BD	AJ	BF
NPT11/2"	13.27	10.35	3.54								

Shaft Extension			Bearings		Approx. Weight Lbs	SPL dBA/3ft	Ins. Class	S.F.	Drive Method	Dimensions
N-W	U	V	DE	NDE						
4.62	1.875	4.5	6311ZC3	6310ZC3	510	66	F	1.15	Direct Coupling / Belt Drive	Inches

TECO Westinghouse MOTORS (CANADA) INC.	
	Date: June 26, 2020

Technical Data Sheet

Motor Type: AEHH8B	Catalogue No: APH0206-841

Nameplate Information

HP	Pole	RPM	Frame	Voltage	Hz	Phase
20	6	1170	286T	460	60	3
Enclosure	Ins. Class	Service Factor	Time Rating	NEMA Design	Rated Amb.	Rated Altitude
TEFC	F	1.15	Continuous	B	-40 to 40 °C	<1000 m

Typical Performance

Efficiency (%)				Power Factor (%)		
Full Load		3/4 Load	1/2 Load	Full Load	3/4 Load	1/2 Load
Nom.	Min.					
91.7	90.2	92.4	92.4	84.0	81.0	73.0
Torque				Current (A)		
Full Load (lb-ft)	Locked Rotor (% FLT)	Pull Up (% FLT)	Break Down (% FLT)	No Load	Full Load	Locked Rotor
89.75	210	160	225	7.5	24.3	145
NEMA KVA Code	Inertia (WR^2)			Safe Stall Time (s)		Noise Level Sound Press. dB(A)
	Rotor ($lb\text{-}ft^2$)	NEMA Load ($lb\text{-}ft^2$)	Max. Allowable ($lb\text{-}ft^2$)	Cold	Hot	
G	8.340	262.00	610.00	35	25	66

VFD Duty Information

Speed Range			VFD		S.F.
Constant Torque	Variable Torque	Constant Power	Carrier	Type	
6-60Hz	3-60Hz	60-120Hz	≤ 5 kHz	VPWM or CPWM	1.0 Only

Hazardous Locations Information

CSA Certified	
Class I, Div 2, Groups B, C & D Class I, Zone 2, Groups IIB+H2, IIB & IIA	
Temp Code (Sinewave / VFD)	T3C / T3B

Additional Certifications

Other Certification

Additional Information

Bearings		Approx. Weight
DE	NDE	lbs
6311ZC3	6310ZC3	510

TECO Westinghouse MOTORS (CANADA) INC.	
	Date: June 26, 2020

Nameplate Drawing

Advantage Plus IEEE 841

TYPE	AEHH8B	CAT. NO.	APH0206-841		
OUTPUT	20 HP 15 kW	FRAME	286T	TEFC	
R.P.M.	1170	POLE	6	INS.	F
VOLTS	460	PHASE	3	Hz	60
AMPS	24.3	CODE	G	S.F.	1.15
AMBIENT	40 °C	NOM. EFF. 91.7		MIN. EFF. 90.2	
BEARINGS	6311ZC3 / 6310ZC3			RATING Cont.	

SER. NO.	TBD	DESIGN	B	WT. 510 LBS

PWM VFD DUTY	VT	CT	CP	S.F.
	3-60Hz	6-60Hz	60-120Hz	1.0 Only

Connection Diagram

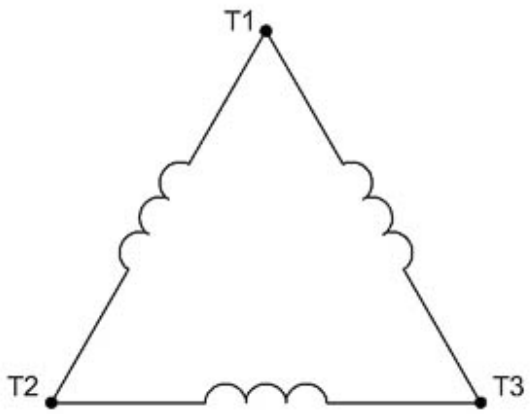

3 LEAD SINGLE VOLTAGE DELTA					
VOLTAGE	CONN.	L1	L2	L3	
-	DELTA	1	2	3	

WD_3D

TECO Westinghouse MOTORS (CANADA) INC.	
	Date: June 26, 2020

Thermal Limit Curves

Motor Type: AEHH8B		Catalogue No: APH0206-841		Family: Advantage Plus IEEE 841	
HP	20	Safe Stall Time		Full Load A	24.3 A
Voltage	460V 60Hz	Hot	25 s	% Inrush	596 %
RPM	1200	Cold	35 s	Locked Rotor A	145 A

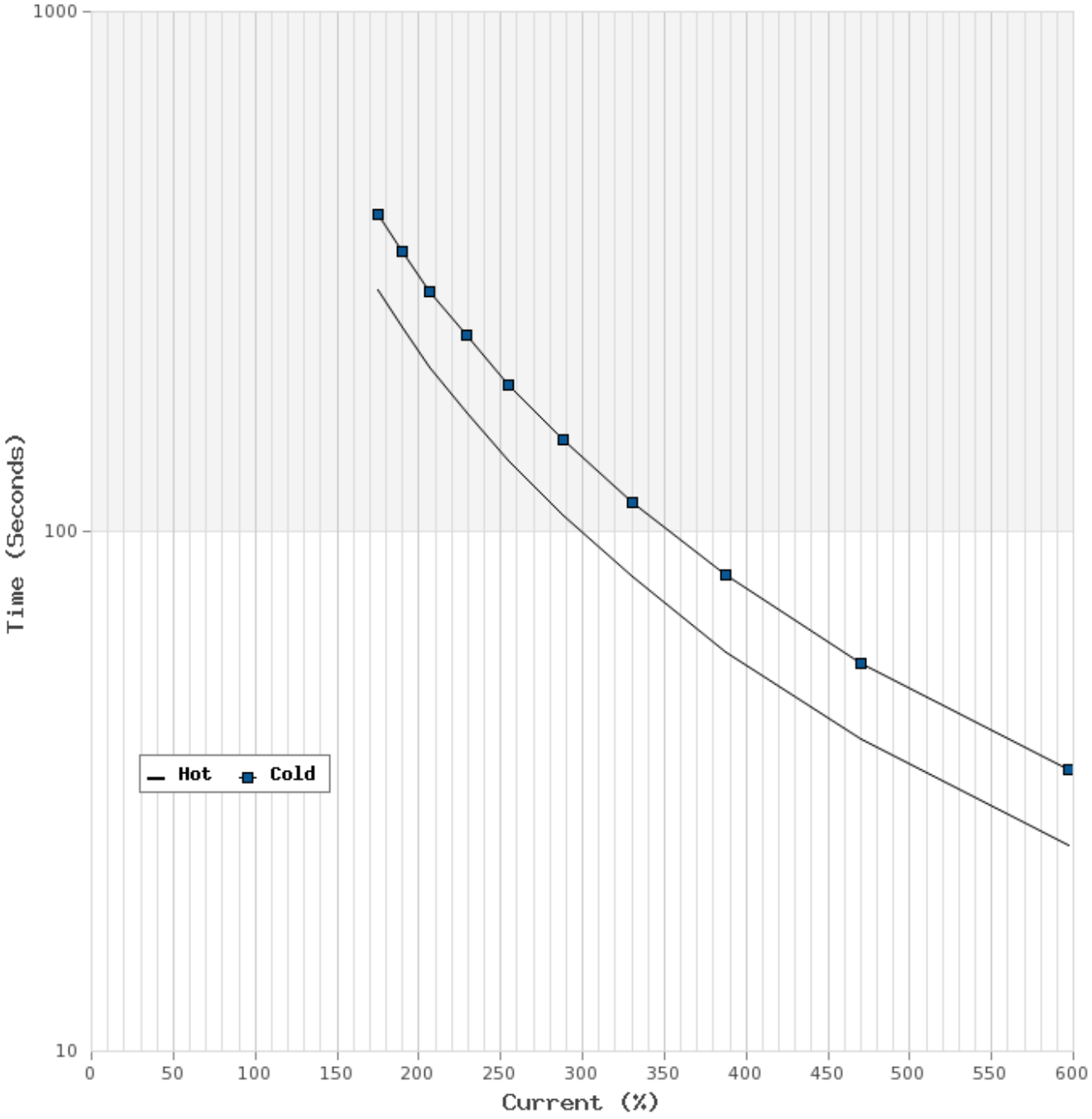

TECO Westinghouse MOTORS (CANADA) INC.	
	Date: June 26, 2020

T-N and I-N Curves
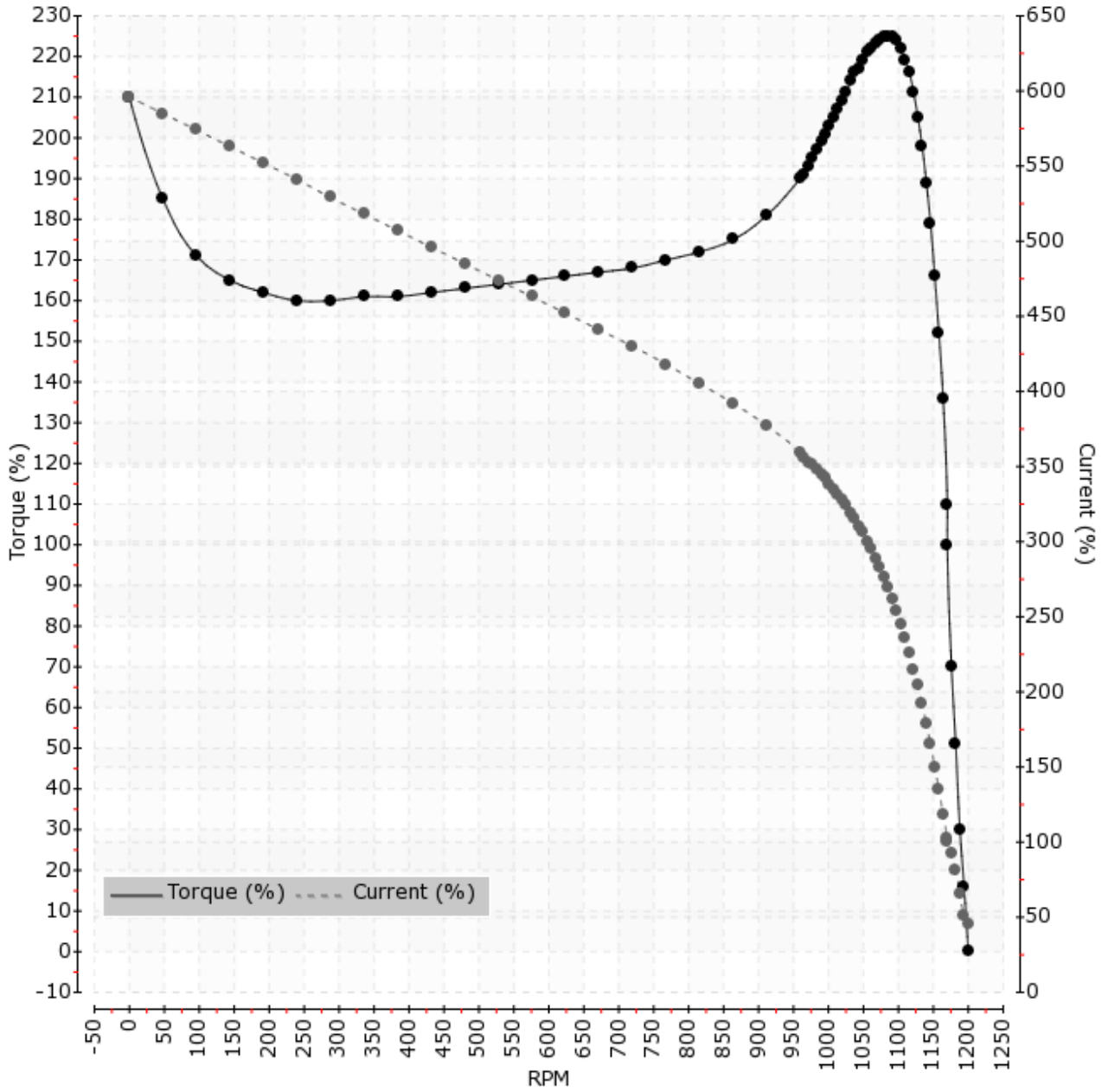
Motor Type: AEHH8B		Catalogue No: APH0206-841		Family: Advantage Plus IEEE 841	
HP	20	Full Load T	89.75 lb-ft	Full Load A	24.3 A
Voltage	460V 60Hz	Locked Rotor T	210 %	Locked Rotor A	145.0 A
RPM	1200	Pull Up T	160 %	Break Down T	225 %