Technical Documentation

XC00265

Optim TEXP | AEHHXV

Date: December 1, 2016

TECO Westinghouse MOTORS (CANADA) INC.	
	Date: December 1, 2016

Dimensional Drawing

Catalogue	Model	HP	Pole	kW	Rating	Voltage	Hz	RPM
XC00265	AEHHXV	2	6	1.5	Continuous	575 V	60	1200

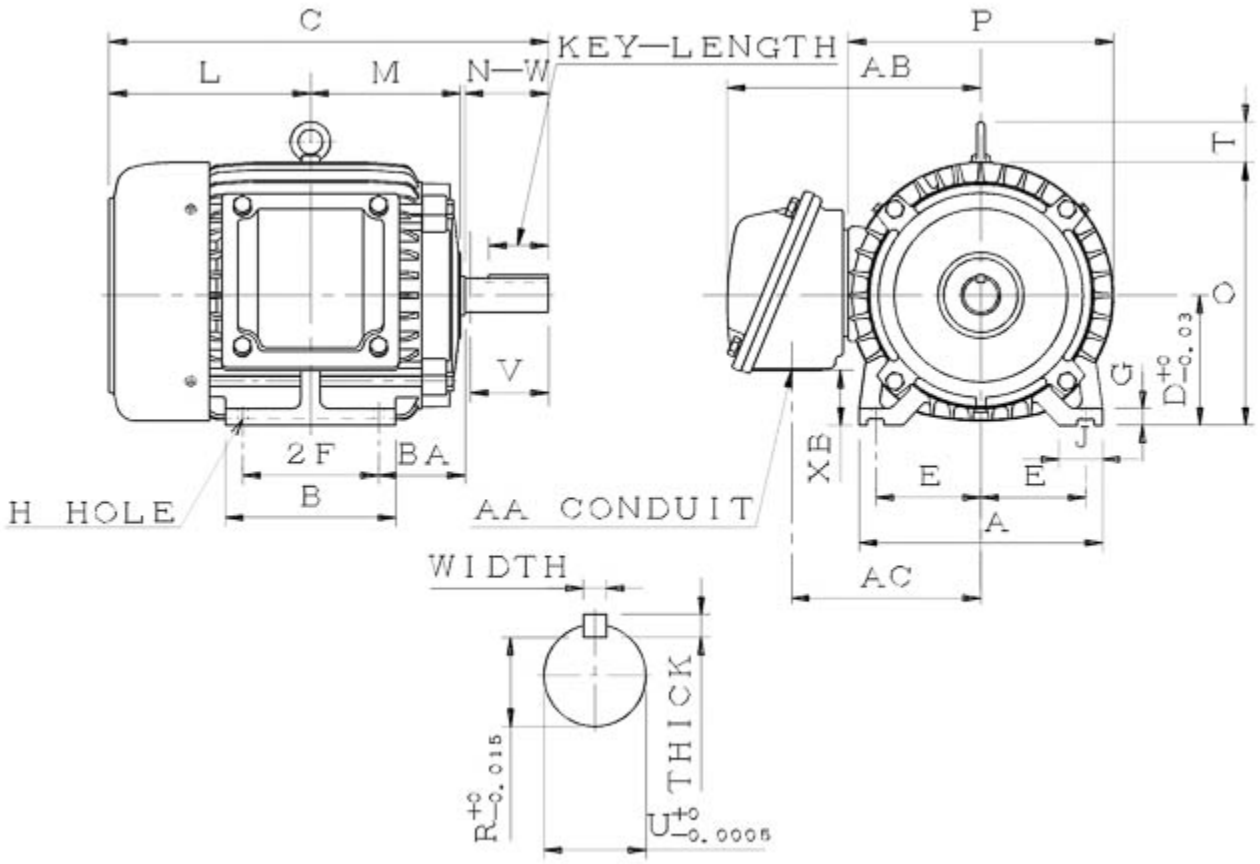

Frame Size	Mounting					A	B	C	CD	D
	E	2F	2F2	H	BA					
184T	3.75	5.5		0.41	2.75	8.8	6.9	15.91		4.5

G	J	K	L	M	O	P	T	Key			Keyseat
								Width	Thick	Length	R
0.65	1.75		7.66	5.41	9.35	9.6	1.15	0.25	0.25	1.78	0.986

Terminal Housing				Aux Box		C/D Flange					
AA	AB	AC	XB	AE	AX	BB	AH	AK	BD	AJ	BF
NPT3/4"	8.78	6.45	2.33								

Shaft Extension			Bearings		Approx. Weight Lbs	SPL dBA/3ft	Ins. Class	S.F.	Drive Method	Dimensions
N-W	U	V	DE	NDE						
2.75	1.125	2.7	6306ZZ	6306ZZ	120	55.0	F	1.15	Direct Coupling / Belt Drive	Inches

TECO Westinghouse MOTORS (CANADA) INC.	
	Date: December 1, 2016

Technical Data Sheet

Motor Type: AEHHXV	Catalogue No: XC00265

Nameplate Information

HP	Pole	RPM	Frame	Voltage	Hz	Phase
2	6	1165	184T	575	60	3
Enclosure	Ins. Class	Service Factor	Time Rating	NEMA Design	Rated Amb.	Rated Altitude
TEXP	F	1.15	Continuous	B	°C	<3300 ft

Typical Performance

Efficiency (%)				Power Factor (%)		
Full Load		3/4 Load	1/2 Load	Full Load	3/4 Load	1/2 Load
Nom.	Min.					
88.5	86.5	89.0	87.0	69.0	62.0	50.0
Torque				Current (A)		
Full Load (lb-ft)	Locked Rotor (% FLT)	Pull Up (% FLT)	Break Down (% FLT)	No Load	Full Load	Locked Rotor
9.0	180.0	150.0	275.0	1.4	2.5	20
NEMA KVA Code	Inertia (WR^2)			Safe Stall Time (s)		Noise Level Sound Press. dB(A)
	Rotor ($lb\text{-}ft^2$)	NEMA Load ($lb\text{-}ft^2$)	Max. Allowable ($lb\text{-}ft^2$)	Cold	Hot	
L	0.4	30.0	185.0	95.0	67.0	55.0

VFD Duty Information

Speed Range			VFD		S.F.
Constant Torque	Variable Torque	Constant Power	Carrier	Type	
12-60Hz	3-60Hz	60-90Hz	≤ 5 kHz	VPWM or CPWM	1.0 Only

Additional Information

Bearings		Approx. Weight
DE	NDE	lbs
6306ZZ	6306ZZ	120

Hazardous Locations Information

CSA/UL Certified	
Class I, Div 1, Groups C & D; Class II, Div 1, Groups E, F & G Class I, Zone 1, Groups IIB & IIA; Class II, Div 1, Groups E, F & G	
Temp Code (Sinewave / VFD)	T3B / T3B

Connection Diagram

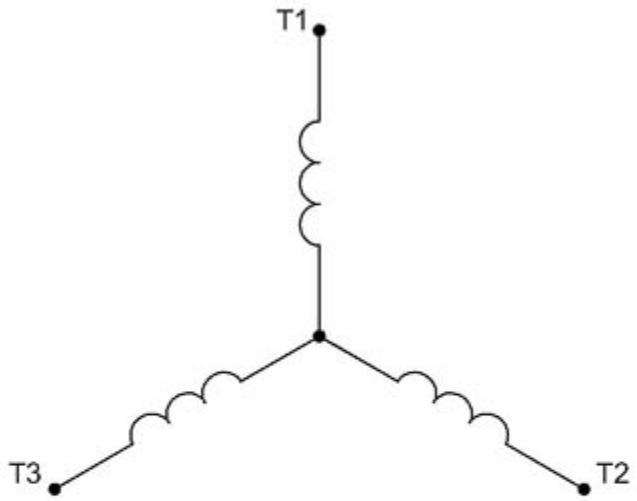

3 LEAD SINGLE VOLTAGE WYE					
VOLTAGE	CONN.	L1	L2	L3	
-	WYE	1	2	3	

WD_3Y

TECO Westinghouse MOTORS (CANADA) INC.	
	Date: December 1, 2016

Thermal Limit Curves

Motor Type: AEHHXV		Catalogue No: XC00265		Family: Optim TEXP	
HP	2	Safe Stall Time		Full Load A	0.0 / 2.5 A
Voltage	0 / 575V 60Hz	Hot	67.0 s	Locked Rotor A	816 %
RPM	1200	Cold	95.0 s	Locked Rotor A	0.0 / 20 A

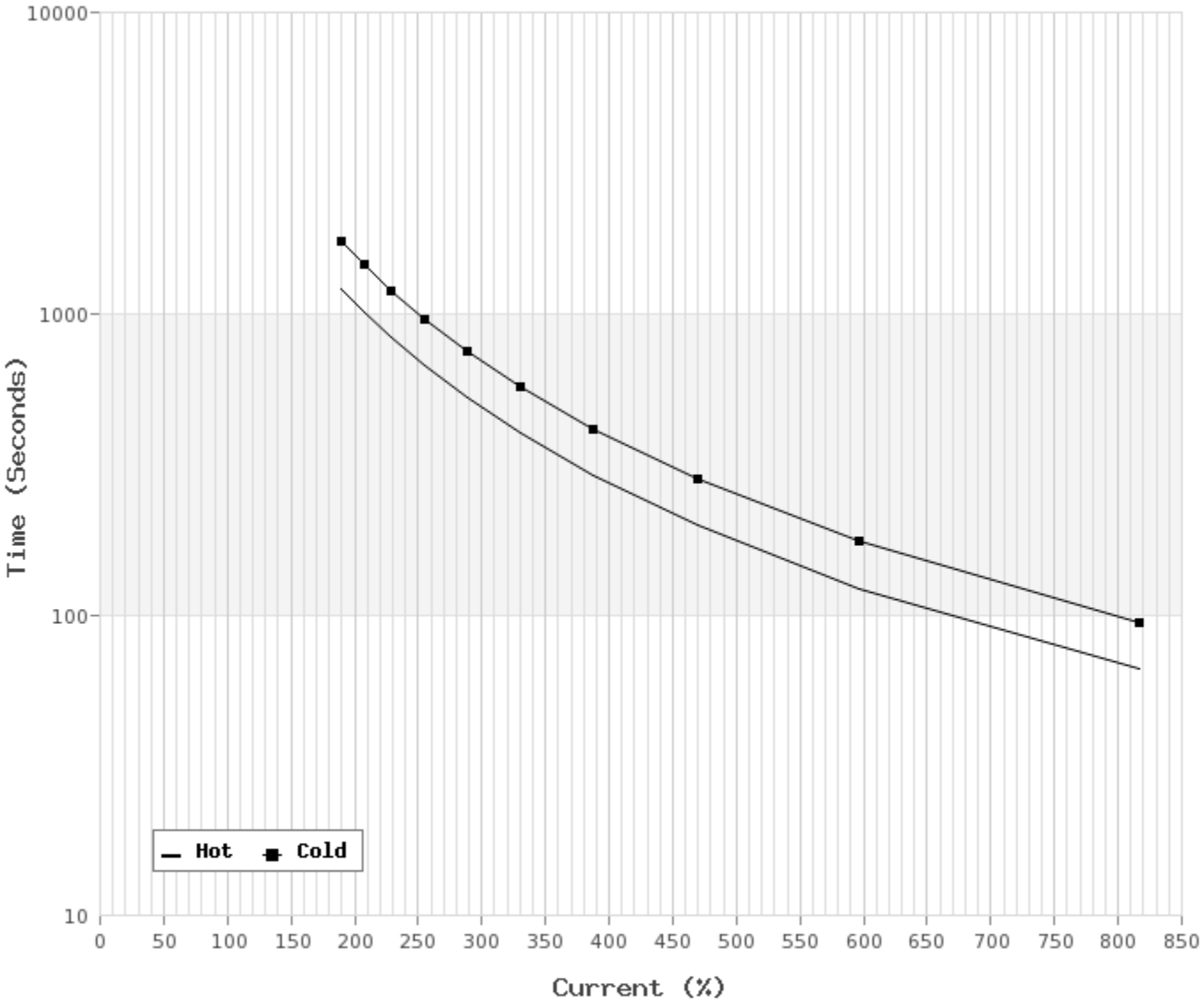

TECO Westinghouse MOTORS (CANADA) INC.	
	Date: December 1, 2016

T-N and I-N Curves
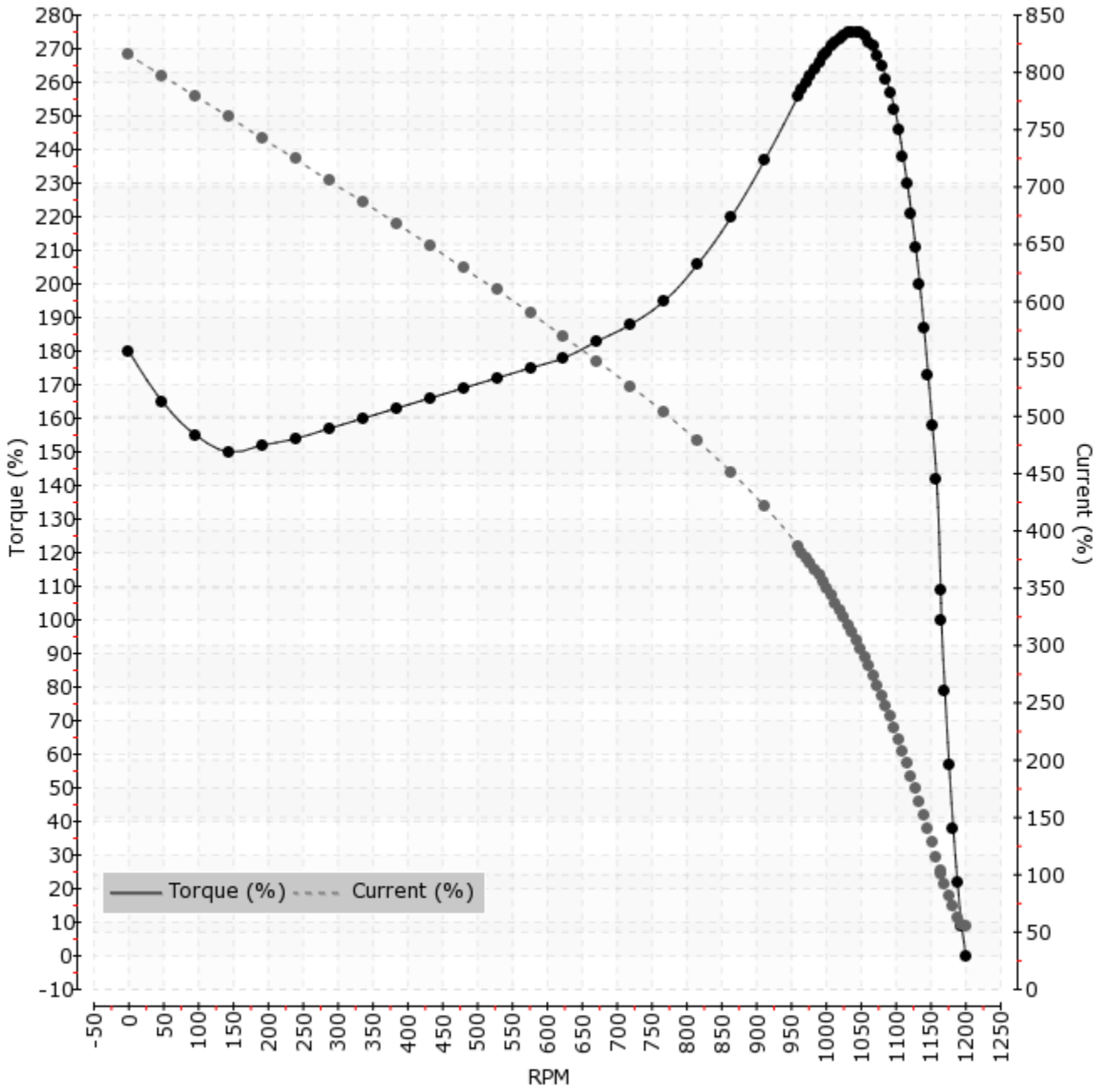
Motor Type: AEHHXV		Catalogue No: XC00265		Family: Optim TEXP	
HP	2	Full Load T	9.0 lb-ft	Full Load A	2.5 A
Voltage	575V 60Hz	Locked Rotor T	180.0 %	Locked Rotor A	20.0 A
RPM	1200	Pull Up T	150.0 %	Break Down T	275.0 %