Technical Documentation

PDH00145C

Optim TEFC | AEHH8N

Date: November 29, 2016

TECO Westinghouse MOTORS (CANADA) INC.	
	Date: November 29, 2016

Dimensional Drawing

Catalogue	Model	HP	Pole	kW	Rating	Voltage	Hz	RPM
PDH00145C	AEHH8N	1	4	0.75	Continuous	575 V	60	1800

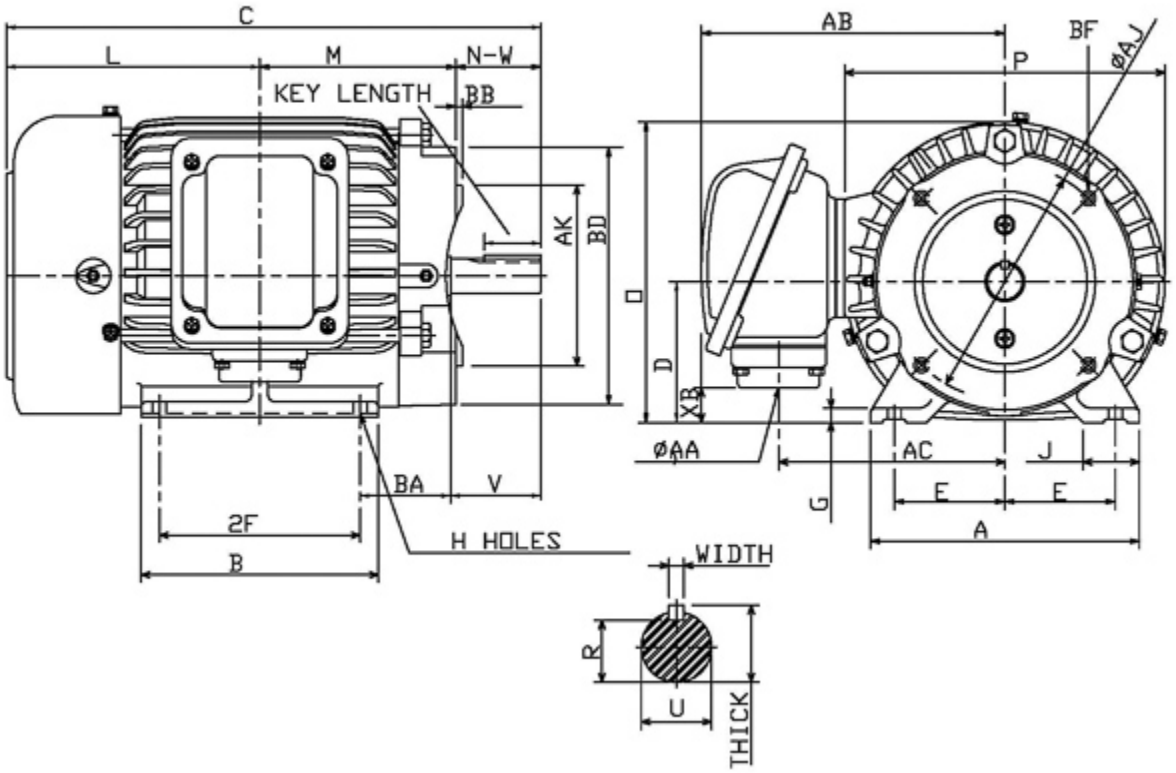

Frame Size	Mounting					A	B	C	CD	D
	E	2F	2F2	H	BA					
143TC	2.75	4		0.34	2.25	6.7	5.1	12.34		3.5

G	J	K	L	M	O	P	T	Key			Keyseat
								Width	Thick	Length	R
0.35	1.4		5.84	4.03	7.48	7.97		0.188	0.188	1.41	0.771

Terminal Housing				Aux Box		C/D Flange					
AA	AB	AC	XB	AE	AX	BB	AH	AK	BD	AJ	BF
3/4 NPT	7.56	5.63	0.86			0.16	2.12	4.5	6.4	5.875	3/8-16UNC

Shaft Extension			Bearings		Approx. Weight Lbs	SPL dBA/3ft	Ins. Class	S.F.	Drive Method	Dimensions
N-W	U	V	DE	NDE						
2.25	0.875	2.2	6205ZZ	6205ZZ	55	49	F	1.15	Direct Coupling / Belt Drive	Inches

TECO Westinghouse MOTORS (CANADA) INC.	
	Date: November 29, 2016

Technical Data Sheet

Motor Type: AEHH8N	Catalogue No: PDH00145C

Nameplate Information

HP	Pole	RPM	Frame	Voltage	Hz	Phase
1	4	1745	143TC	575	60	3
Enclosure	Ins. Class	Service Factor	Time Rating	NEMA Design	Rated Amb.	Rated Altitude
TEFC	F	1.15	Continuous	B	-40 to 40 °C	<3300 ft

Typical Performance

Efficiency (%)				Power Factor (%)		
Full Load		3/4 Load	1/2 Load	Full Load	3/4 Load	1/2 Load
Nom.	Min.					
85.5	82.5	84.0	81.5	73.0	64.5	51.5
Torque				Current (A)		
Full Load (lb-ft)	Locked Rotor (% FLT)	Pull Up (% FLT)	Break Down (% FLT)	No Load	Full Load	Locked Rotor
3.01	310	280	410	0.6	1.2	12
NEMA KVA Code	Inertia (WR^2)			Safe Stall Time (s)		Noise Level Sound Press. dB(A)
	Rotor ($lb\text{-}ft^2$)	NEMA Load ($lb\text{-}ft^2$)	Max. Allowable ($lb\text{-}ft^2$)	Cold	Hot	
N	0.086	5.8	46.0	71	50	49

VFD Duty Information

Speed Range			VFD		S.F.
Constant Torque	Variable Torque	Constant Power	Carrier	Type	
6-60Hz	3-60Hz	60-120Hz	≤ 5 kHz	VPWM or CPWM	1.0 Only

Additional Information

Bearings		Approx. Weight
DE	NDE	lbs
6205ZZ	6205ZZ	55

Hazardous Locations Information

CSA Certified	
Class I, Div 2, Groups B, C & D Class I, Zone 2, Groups IIB+H2, IIB & IIA	
Temp Code (Sinewave / VFD)	T3C / T3C

Connection Diagram

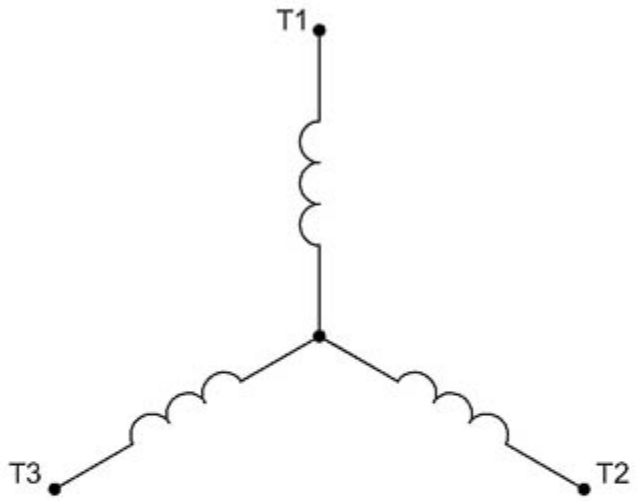

3 LEAD SINGLE VOLTAGE WYE					
VOLTAGE	CONN.	L1	L2	L3	
-	WYE	1	2	3	

WD_3Y

TECO Westinghouse MOTORS (CANADA) INC.	
	Date: November 29, 2016

Thermal Limit Curves

Motor Type: AEHH8N		Catalogue No: PDH00145C		Family: Optim TEFC	
HP	1	Safe Stall Time		Full Load A	0.0 / 1.2 A
Voltage	0 / 575V 60Hz	Hot	50 s	Locked Rotor A	1,000 %
RPM	1800	Cold	71 s	Locked Rotor A	0.0 / 12 A

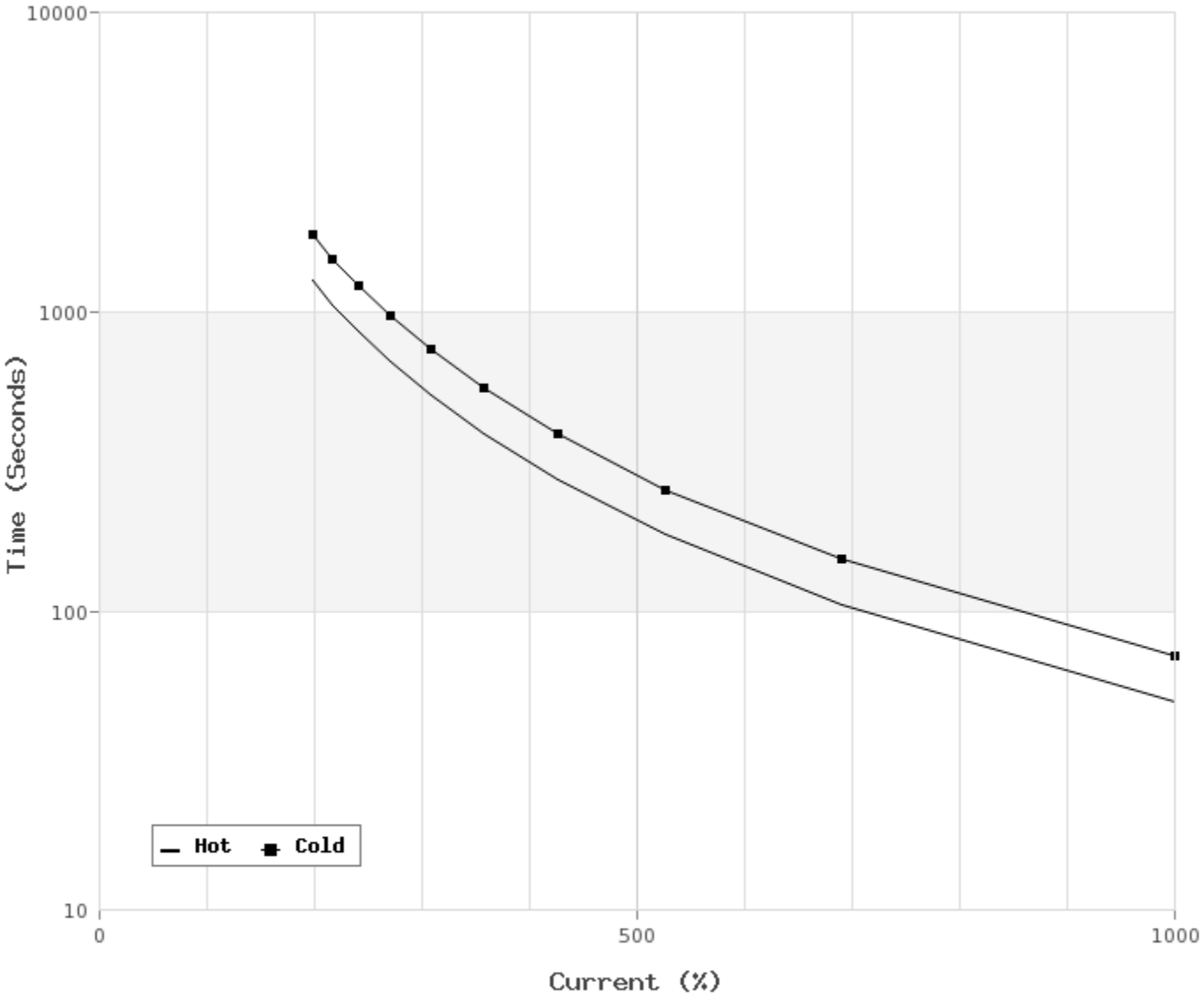

TECO Westinghouse MOTORS (CANADA) INC.	
	Date: November 29, 2016

T-N and I-N Curves
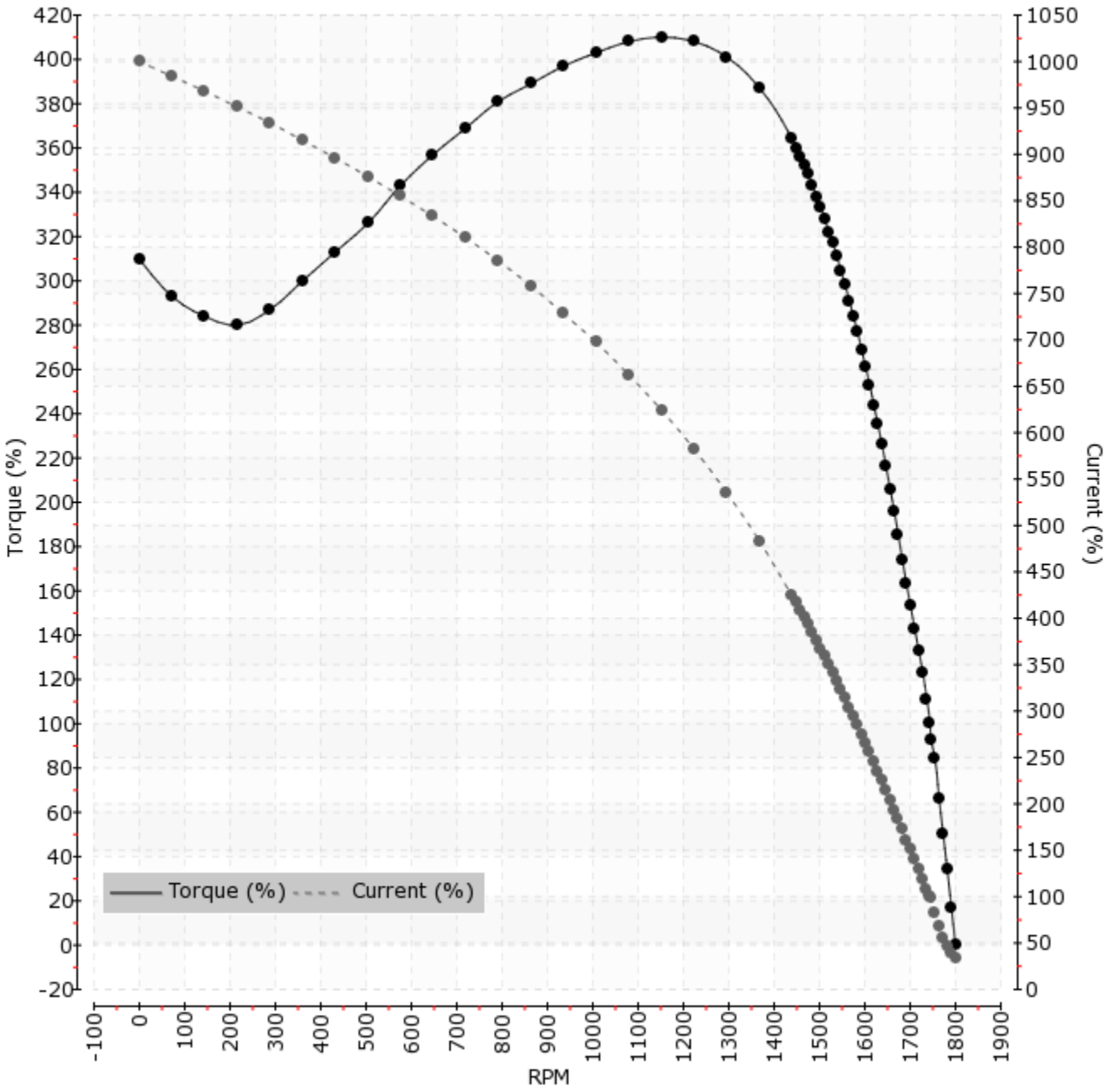
Motor Type: AEHH8N		Catalogue No: PDH00145C		Family: Optim TEFC	
HP	1	Full Load T	3.01 lb-ft	Full Load A	1.2 A
Voltage	575V 60Hz	Locked Rotor T	310 %	Locked Rotor A	12.0 A
RPM	1800	Pull Up T	280 %	Break Down T	410 %