Technical Documentation

RF0012C-56

Rolled Steel TEFC | AEGHPE

Date: July 10, 2017

TECO Westinghouse MOTORS (CANADA) INC.	
	Date: July 10, 2017

Dimensional Drawing

Catalogue	Model	HP	Pole	kW	Rating	Voltage	Hz	RPM
RF0012C-56	AEGHPE	1	2	0.75	Continuous	230 / 460 V	60	3600

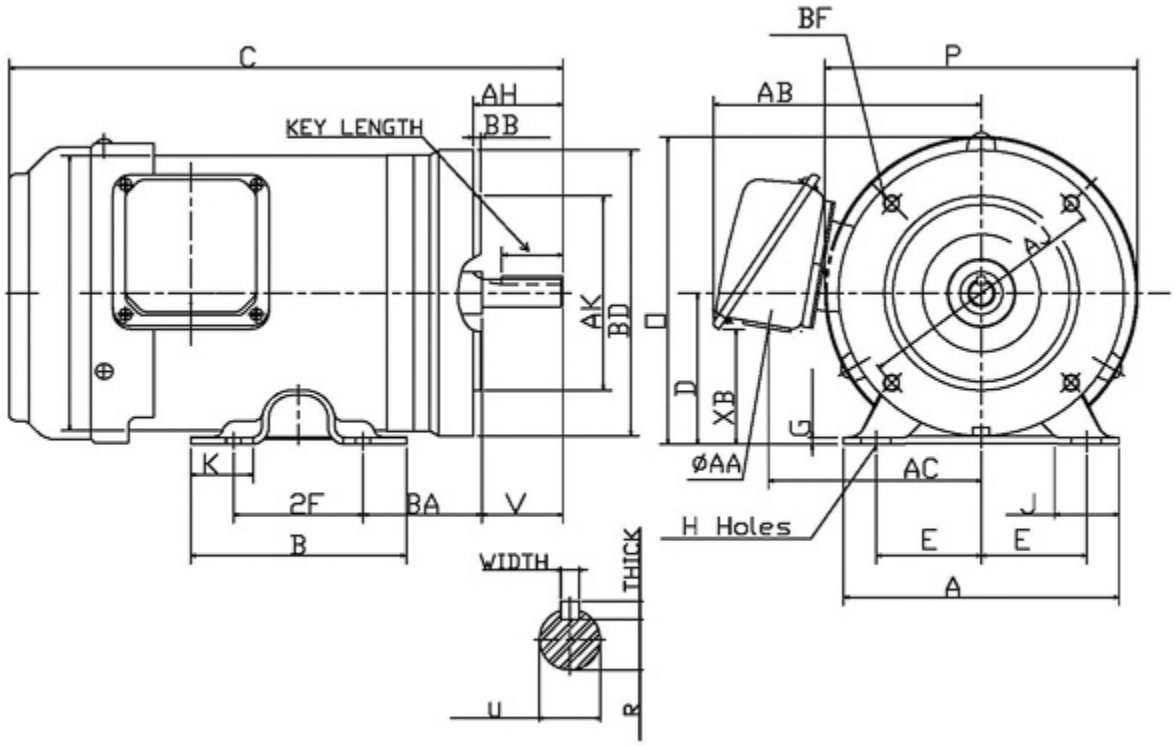

Frame Size	Mounting					A	B	C	CD	D
	E	2F	2F2	H	BA					
56C	2.44	3		0.34x0.68	2.75	6.38	3.94	12.16		3.5

G	J	K	L	M	O	P	T	Key			Keyseat
								Width	Thick	Length	R
0.16	1.54				6.72	6.61		0.188	0.188	1.41	0.517

Terminal Housing				Aux Box		C/D Flange					
AA	AB	AC	XB	AE	AX	BB	AH	AK	BD	AJ	BF
1.1	5.87	4.64	2.61			0.16	2.06	4.5	6.61	5.875	3/8-16

Shaft Extension			Bearings		Approx. Weight Lbs	SPL dBA/3ft	Ins. Class	S.F.	Drive Method	Dimensions
N-W	U	V	DE	NDE						
1.875	0.625	1.88	6205ZZ	6204ZZ	30	60	F	1.15	Direct Coupling / Belt Drive	Inches

TECO Westinghouse MOTORS (CANADA) INC.	
	Date: July 10, 2017

Technical Data Sheet

Motor Type: AEGHPE	Catalogue No: RF0012C-56

Nameplate Information

HP	Pole	RPM	Frame	Voltage	Hz	Phase
1	2	3420	56C	230 / 460	60	3
Enclosure	Ins. Class	Service Factor	Time Rating	NEMA Design	Rated Amb.	Rated Altitude
TEFC	F	1.15	Continuous	B	-40 to 40°C °C	<3300 ft

Typical Performance

Efficiency (%)				Power Factor (%)		
Full Load		3/4 Load	1/2 Load	Full Load	3/4 Load	1/2 Load
Nom.	Min.					
77.0	74.0	81.0	78.0	79.5	78.5	67.5
Torque				Current (A)		
Full Load (lb-ft)	Locked Rotor (% FLT)	Pull Up (% FLT)	Break Down (% FLT)	No Load	Full Load	Locked Rotor
1.51	295	290	320	1.4 / 0.7	3.1 / 1.5	22 / 11
NEMA KVA Code	Inertia (WR^2)			Safe Stall Time (s)		Noise Level Sound Press. dB(A)
	Rotor ($lb\text{-}ft^2$)	NEMA Load ($lb\text{-}ft^2$)	Max. Allowable ($lb\text{-}ft^2$)	Cold	Hot	
K	0.036	1.9	5.249	17	12	60

VFD Duty Information

Speed Range			VFD		S.F.
Constant Torque	Variable Torque	Constant Power	Carrier	Type	
6-60Hz	3-60Hz	60-120Hz	≤ 5 kHz	VPWM or CPWM	1.0 Only

Additional Information

Bearings		Approx. Weight
DE	NDE	lbs
6205ZZ	6204ZZ	30

Hazardous Locations Information

N/A	
0 0	
Temp Code (Sinewave / VFD)	0 / 0

Nameplate Drawing

Rolled Steel TEFC

TYPE	AEGHPE	CAT. NO.	RF0012C-56		
OUTPUT	1 HP 0.75 kW	FRAME	56C	TEFC	
R.P.M.	3420	POLE	2	INS.	F
VOLTS	230 / 460	PHASE	3	Hz	60
AMPS	3.1 / 1.5	CODE	K	S.F.	1.15
AMBIENT	40 °C	NOM. EFF. 77.0		MIN. EFF. 74.0	
BEARINGS	6205ZZ / 6204ZZ			RATING Cont.	

SER. NO.	TBD	DESIGN	B	WT. 30 LBS

PWM VFD DUTY	VT	CT	CP	S.F.
	3-60Hz	6-60Hz	60-120Hz	1.0 Only

Connection Diagram

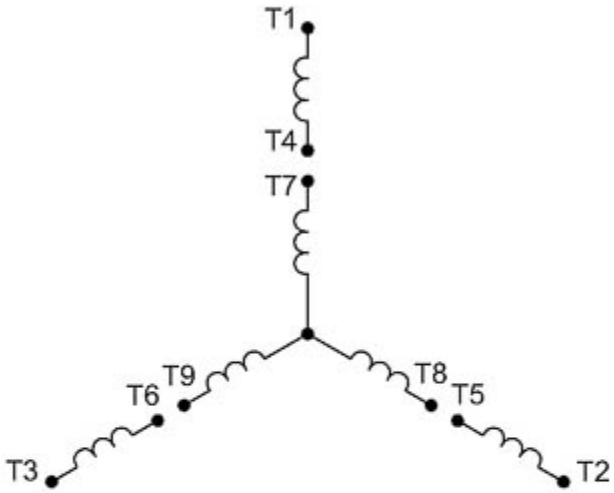

9 LEAD DUAL VOLTAGE WYE					
VOLTAGE	CONN.	L1	L2	L3	JOIN
HIGH	WYE	1	2	3	4&7,5&8,6&9
LOW	2 WYE	1,7	2,8	3,9	4&5&6

WD_9Y