Technical Documentation

APH01045

Advantage Plus IEEE Ready | AEHH8R

Date: June 26, 2020

TECO Westinghouse MOTORS (CANADA) INC.	
	Date: June 26, 2020

Dimensional Drawing

Catalogue	Model	HP	Pole	kW	Rating	Voltage	Hz	RPM
APH01045	AEHH8R	10	4	7.5	Continuous	575	60	1800

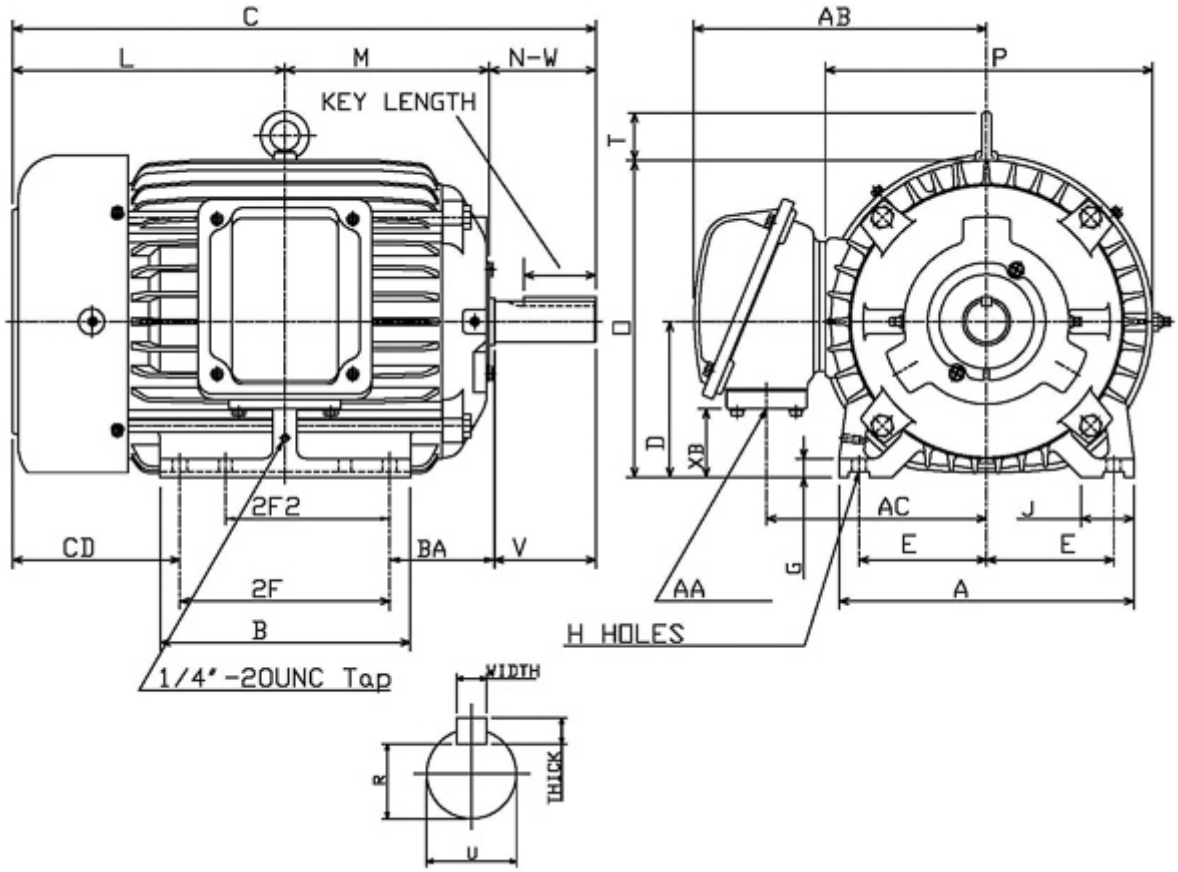

Frame Size	Mounting					A	B	C	CD	D
	E	2F	2F2	H	BA					
215T	4.25	7	5.5	0.41	3.5	9.85	8.35	19.76		5.25

G	J	K	L	M	O	P	T	Key			Keyseat
								Width	Thick	Length	R
0.7	1.75		9.38	6.85	10.62	11.1	1.65	0.312	0.312	2.41	1.201

Terminal Housing				Aux Box		C/D Flange					
AA	AB	AC	XB	AE	AX	BB	AH	AK	BD	AJ	BF
NPT1"	9.78	7.34	2.34								

Shaft Extension			Bearings		Approx. Weight Lbs	SPL dBA/3ft	Ins. Class	S.F.	Drive Method	Dimensions
N-W	U	V	DE	NDE						
3.38	1.375	3.3	6308ZC3	6306ZC3	194	60	F	1.15	Direct Coupling / Belt Drive	Inches

TECO Westinghouse MOTORS (CANADA) INC.	
	Date: June 26, 2020

Technical Data Sheet

Motor Type: AEHH8R	Catalogue No: APH01045

Nameplate Information

HP	Pole	RPM	Frame	Voltage	Hz	Phase
10	4	1755	215T	575	60	3
Enclosure	Ins. Class	Service Factor	Time Rating	NEMA Design	Rated Amb.	Rated Altitude
TEFC	F	1.15	Continuous	B	-40 to 40 °C	<1000 m

Typical Performance

Efficiency (%)				Power Factor (%)		
Full Load		3/4 Load	1/2 Load	Full Load	3/4 Load	1/2 Load
Nom.	Min.					
91.7	90.2	91.0	91.0	88.0	84.0	75.5
Torque				Current (A)		
Full Load (lb-ft)	Locked Rotor (% FLT)	Pull Up (% FLT)	Break Down (% FLT)	No Load	Full Load	Locked Rotor
29.92	250	145	260	2.7	9.3	65
NEMA KVA Code	Inertia (WR^2)			Safe Stall Time (s)		Noise Level Sound Press. dB(A)
	Rotor ($lb\text{-}ft^2$)	NEMA Load ($lb\text{-}ft^2$)	Max. Allowable ($lb\text{-}ft^2$)	Cold	Hot	
H	1.082	51.00	175.00	40	28	60

VFD Duty Information

Speed Range			VFD		S.F.
Constant Torque	Variable Torque	Constant Power	Carrier	Type	
6-60Hz	3-60Hz	60-120Hz	≤ 5 kHz	VPWM or CPWM	1.0 Only

Hazardous Locations Information

CSA Certified	
Class I, Div 2, Groups B, C & D Class I, Zone 2, Groups IIB+H2, IIB & IIA	
Temp Code (Sinewave / VFD)	T3C / T3B

Additional Certifications

Other Certification
Class II, Div 2, Groups F & G

Additional Information

Bearings		Approx. Weight
DE	NDE	lbs
6308ZC3	6306ZC3	194

TECO Westinghouse MOTORS (CANADA) INC.	
	Date: June 26, 2020

Nameplate Drawing

Advantage Plus IEEE Ready

TYPE	AEHH8R	CAT. NO.	APH01045		
OUTPUT	10 HP 7.5 kW	FRAME	215T	TEFC	
R.P.M.	1755	POLE	4	INS.	F
VOLTS	575	PHASE	3	Hz	60
AMPS	9.3	CODE	H	S.F.	1.15
AMBIENT	40 °C	NOM. EFF. 91.7		MIN. EFF. 90.2	
BEARINGS	6308ZC3 / 6306ZC3			RATING Cont.	

SER. NO.	TBD	DESIGN	B	WT. 194 LBS

PWM VFD DUTY	VT	CT	CP	S.F.
	3-60Hz	6-60Hz	60-120Hz	1.0 Only

Connection Diagram

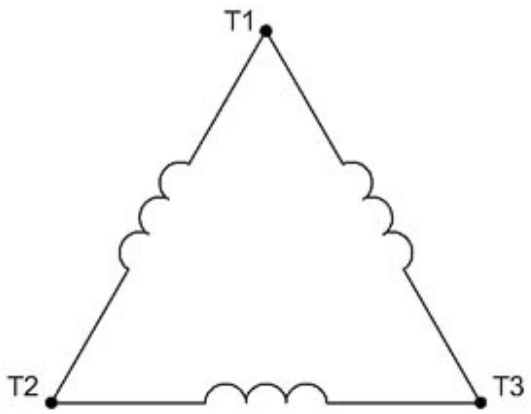

3 LEAD SINGLE VOLTAGE DELTA					
VOLTAGE	CONN.	L1	L2	L3	
-	DELTA	1	2	3	

WD_3D

TECO Westinghouse MOTORS (CANADA) INC.	
	Date: June 26, 2020

Thermal Limit Curves

Motor Type: AEHH8R		Catalogue No: APH01045		Family: Advantage Plus IEEE Ready	
HP	10	Safe Stall Time		Full Load A	9.3 A
Voltage	575V 60Hz	Hot	28 s	% Inrush	700 %
RPM	1800	Cold	40 s	Locked Rotor A	65 A

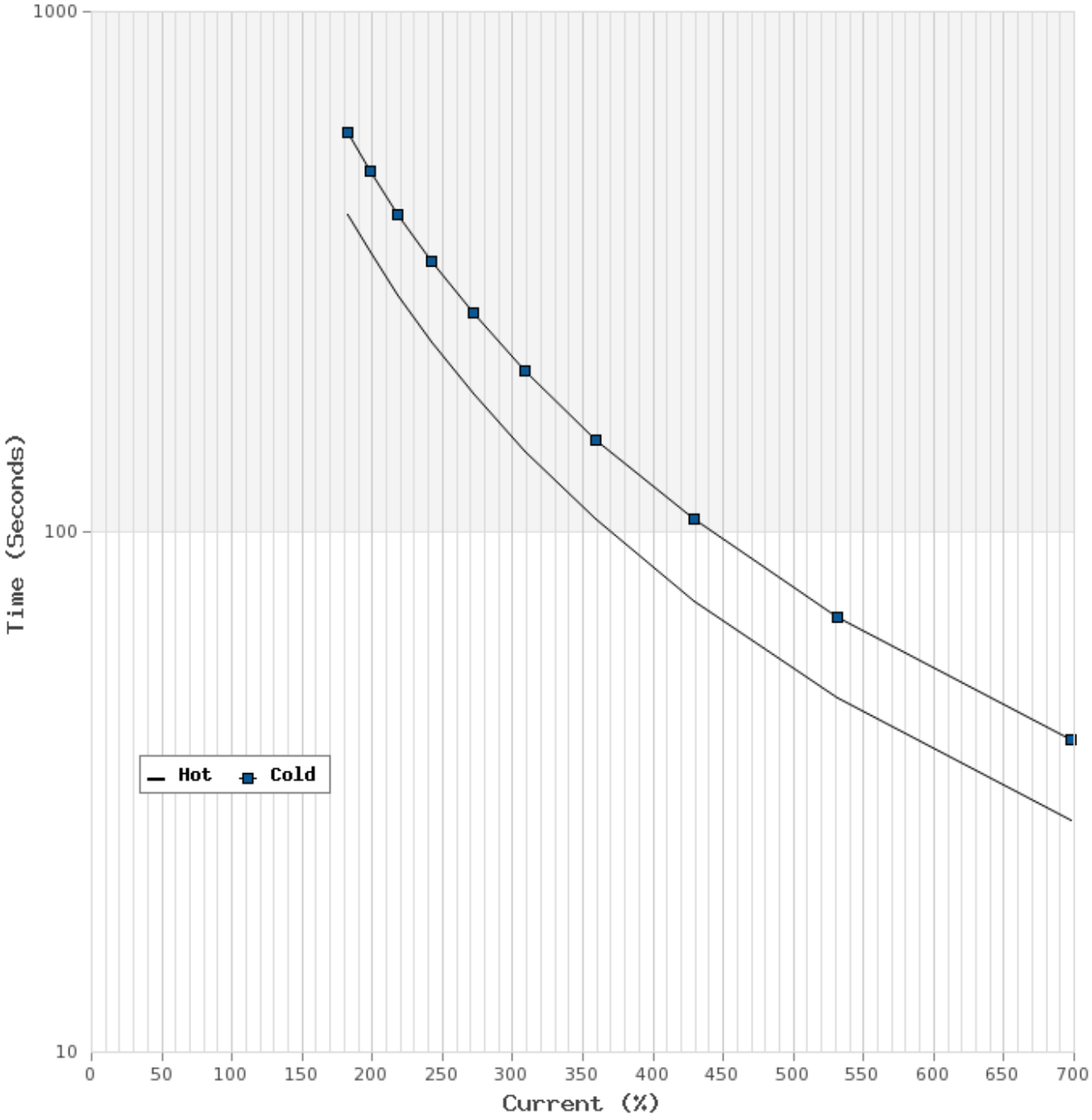

TECO Westinghouse MOTORS (CANADA) INC.	
	Date: June 26, 2020

T-N and I-N Curves
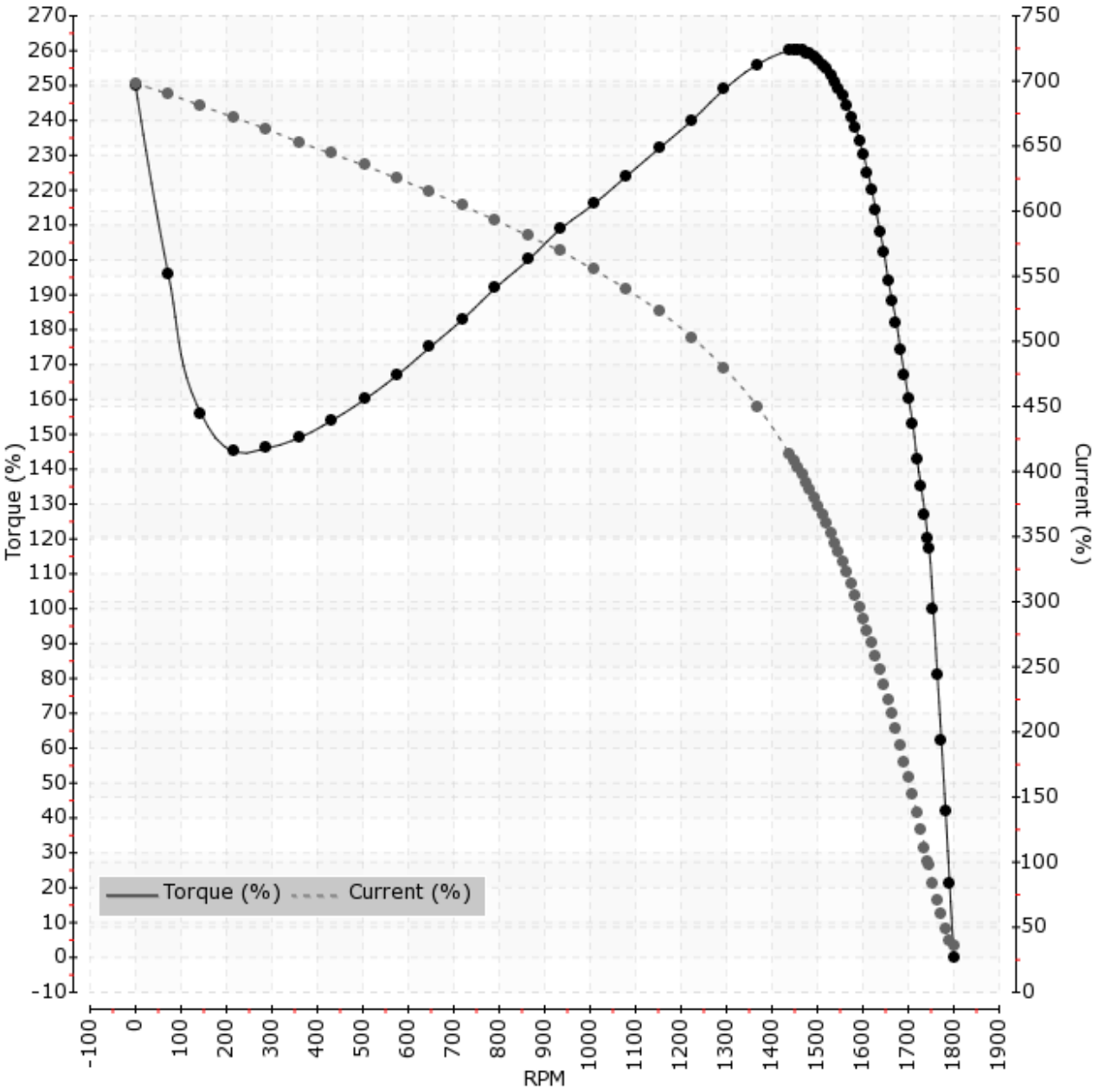
Motor Type: AEHH8R		Catalogue No: APH01045		Family: Advantage Plus IEEE Ready	
HP	10	Full Load T	29.92 lb-ft	Full Load A	9.3 A
Voltage	575V 60Hz	Locked Rotor T	250 %	Locked Rotor A	65.0 A
RPM	1800	Pull Up T	145 %	Break Down T	260 %