Technical Documentation

APH04065-841

Advantage Plus IEEE 841 | AEHH8B

Date: June 29, 2020

TECO Westinghouse MOTORS (CANADA) INC.	
	Date: June 29, 2020

Dimensional Drawing

Catalogue	Model	HP	Pole	kW	Rating	Voltage	Hz	RPM
APH04065-841	AEHH8B	40	6	30	Continuous	575	60	1200

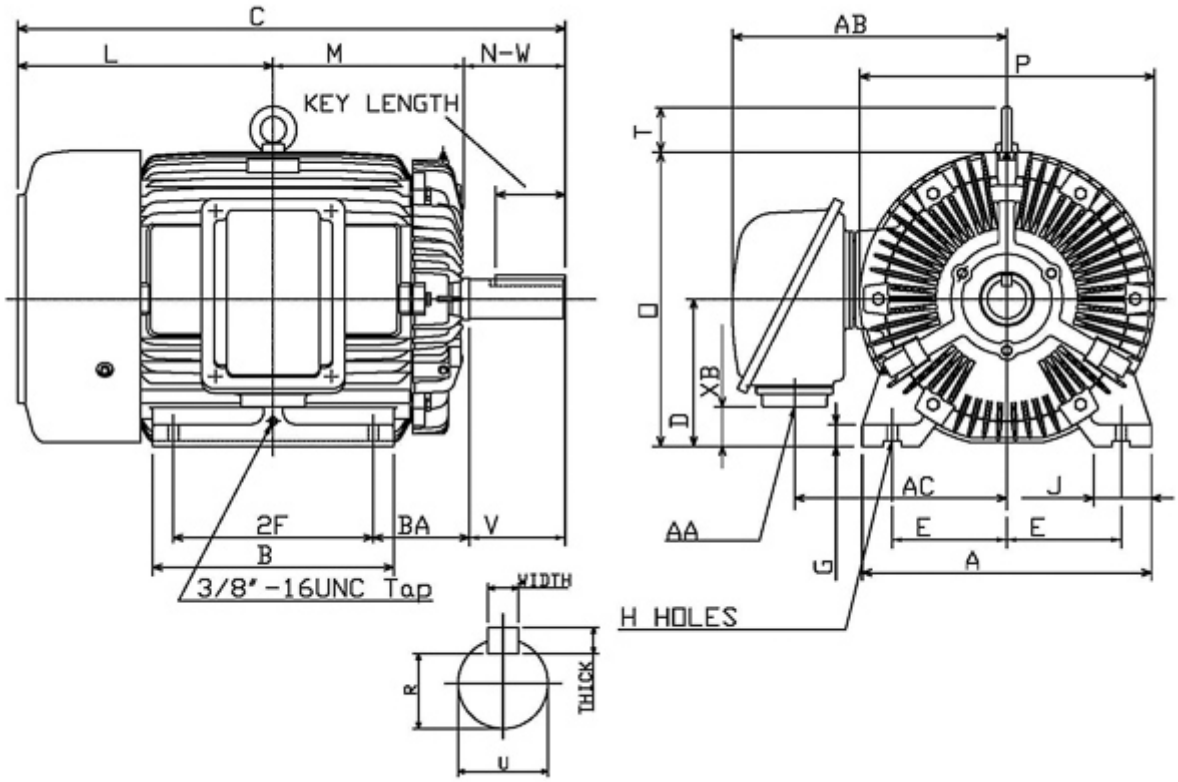

Frame Size	Mounting					A	B	C	CD	D
	E	2F	2F2	H	BA					
364T	7	11.25		0.66	5.88	17.7	13.78	32.57		9

G	J	K	L	M	O	P	T	Key			Keyseat
								Width	Thick	Length	R
1.32	3.54		15.17	11.09	17.99	18.03	2.76	0.625	0.625	4.28	2.021

Terminal Housing				Aux Box		C/D Flange					
AA	AB	AC	XB	AE	AX	BB	AH	AK	BD	AJ	BF
NPT3"	16.81	12.99	2.39								

Shaft Extension			Bearings		Approx. Weight Lbs	SPL dBA/3ft	Ins. Class	S.F.	Drive Method	Dimensions
N-W	U	V	DE	NDE						
5.88	2.375	5.75	6313ZC3	6213ZC3	882	74	F	1.15	Direct Coupling / Belt Drive	Inches

TECO Westinghouse MOTORS (CANADA) INC.	
	Date: June 29, 2020

Technical Data Sheet

Motor Type: AEHH8B	Catalogue No: APH04065-841

Nameplate Information

HP	Pole	RPM	Frame	Voltage	Hz	Phase
40	6	1180	364T	575	60	3
Enclosure	Ins. Class	Service Factor	Time Rating	NEMA Design	Rated Amb.	Rated Altitude
TEFC	F	1.15	Continuous	B	-40 to 40 °C	<1000 m

Typical Performance

Efficiency (%)				Power Factor (%)		
Full Load		3/4 Load	1/2 Load	Full Load	3/4 Load	1/2 Load
Nom.	Min.					
94.1	93.0	94.5	94.1	86.5	84.5	78.0
Torque				Current (A)		
Full Load (lb-ft)	Locked Rotor (% FLT)	Pull Up (% FLT)	Break Down (% FLT)	No Load	Full Load	Locked Rotor
178.00	200	150	220	12.1	36.8	232
NEMA KVA Code	Inertia (WR^2)			Safe Stall Time (s)		Noise Level Sound Press. dB(A)
	Rotor ($lb\text{-}ft^2$)	NEMA Load ($lb\text{-}ft^2$)	Max. Allowable ($lb\text{-}ft^2$)	Cold	Hot	
G	17.936	503.00	1185.00	36	25	74

VFD Duty Information

Speed Range			VFD		S.F.
Constant Torque	Variable Torque	Constant Power	Carrier	Type	
6-60Hz	3-60Hz	60-120Hz	≤ 5 kHz	VPWM or CPWM	1.0 Only

Hazardous Locations Information

CSA Certified	
Class I, Div 2, Groups B, C & D Class I, Zone 2, Groups IIB+H2, IIB & IIA	
Temp Code (Sinewave / VFD)	T3C / T3B

Additional Certifications

Other Certification

Additional Information

Bearings		Approx. Weight
DE	NDE	lbs
6313ZC3	6213ZC3	882

TECO Westinghouse MOTORS (CANADA) INC.	
	Date: June 29, 2020

Nameplate Drawing

Advantage Plus IEEE 841

TYPE	AEHH8B	CAT. NO.	APH04065-841		
OUTPUT	40 HP 30 kW	FRAME	364T	TEFC	
R.P.M.	1180	POLE	6	INS.	F
VOLTS	575	PHASE	3	Hz	60
AMPS	36.8	CODE	G	S.F.	1.15
AMBIENT	40 °C	NOM. EFF. 94.1		MIN. EFF. 93.0	
BEARINGS	6313ZC3 / 6213ZC3			RATING Cont.	

SER. NO.	TBD	DESIGN	B	WT. 882 LBS

PWM VFD DUTY	VT	CT	CP	S.F.
	3-60Hz	6-60Hz	60-120Hz	1.0 Only

Connection Diagram

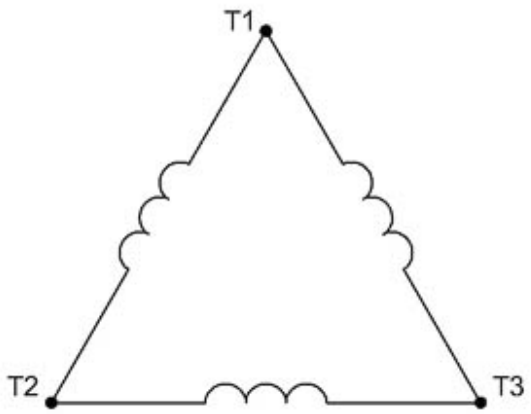

3 LEAD SINGLE VOLTAGE DELTA					
VOLTAGE	CONN.	L1	L2	L3	
-	DELTA	1	2	3	

WD_3D

TECO Westinghouse MOTORS (CANADA) INC.	
	Date: June 29, 2020

Thermal Limit Curves

Motor Type: AEHH8B		Catalogue No: APH04065-841		Family: Advantage Plus IEEE 841	
HP	40	Safe Stall Time		Full Load A	36.8 A
Voltage	575V 60Hz	Hot	25 s	% Inrush	630 %
RPM	1200	Cold	36 s	Locked Rotor A	232 A

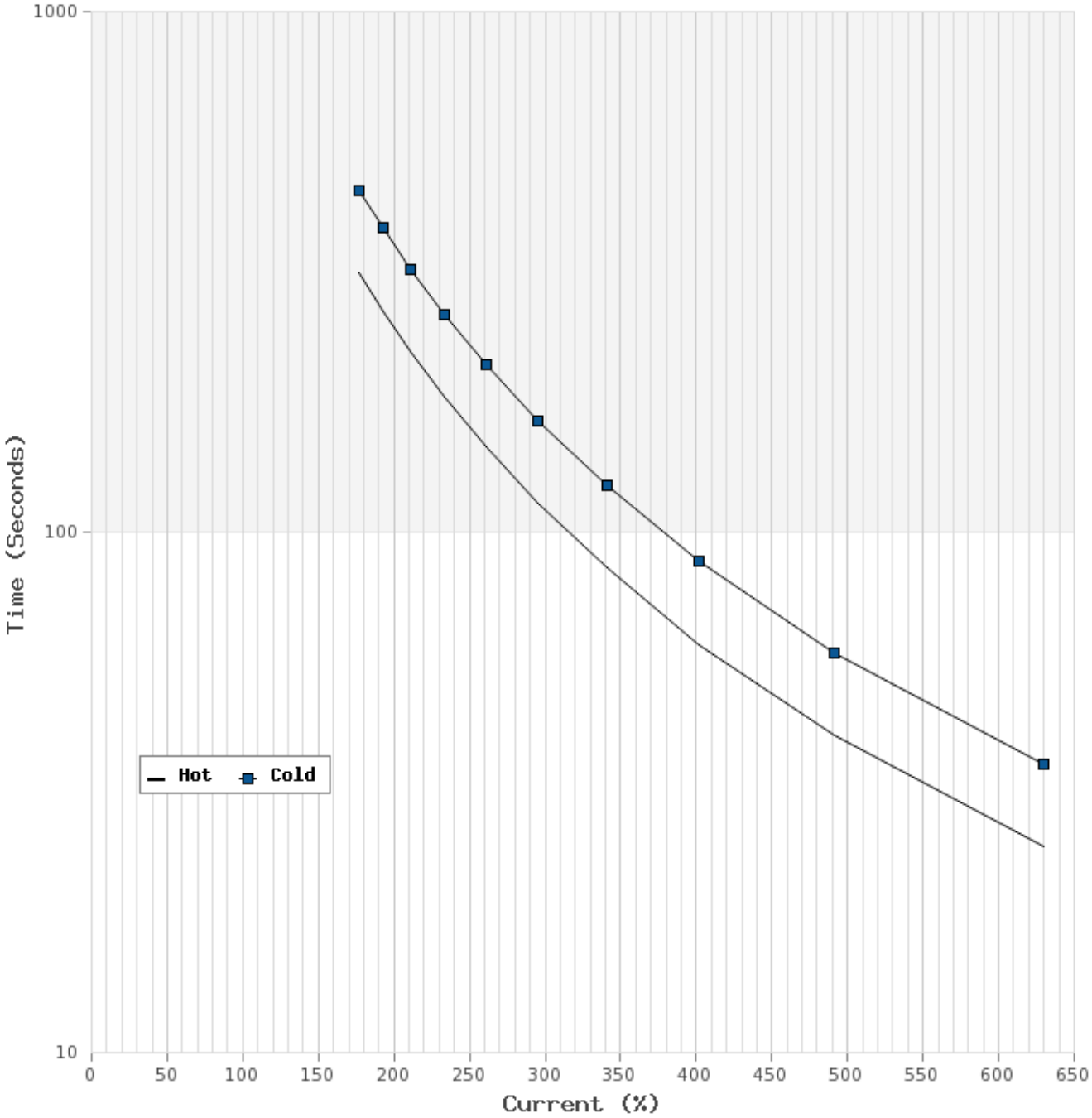

TECO Westinghouse MOTORS (CANADA) INC.	
	Date: June 29, 2020

T-N and I-N Curves
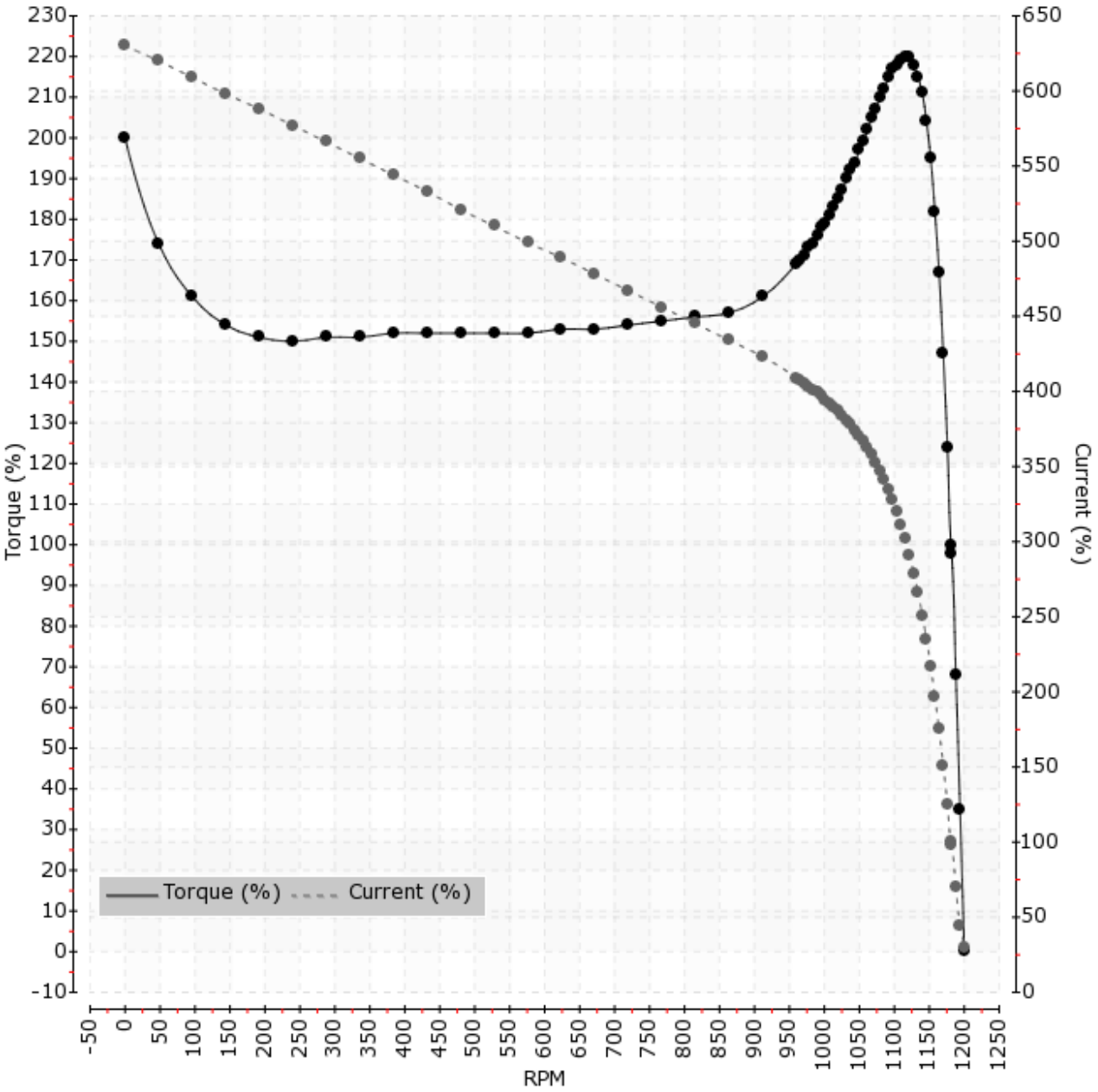
Motor Type: AEHH8B		Catalogue No: APH04065-841		Family: Advantage Plus IEEE 841	
HP	40	Full Load T	178.00 lb-ft	Full Load A	36.8 A
Voltage	575V 60Hz	Locked Rotor T	200 %	Locked Rotor A	232.0 A
RPM	1200	Pull Up T	150 %	Break Down T	220 %