Technical Documentation

# CJM0302

## Optim JM | AEHH8N_JM

Date: November 29, 2016

| | |
|---|---|
| TECO Westinghouse MOTORS (CANADA) INC. | |
| | |
| | |
| | Date: November 29, 2016 |

## Dimensional Drawing

| Catalogue | Model | HP | Pole | kW | Rating | Voltage | Hz | RPM |
|---|---|---|---|---|---|---|---|---|
| CJM0302 | AEHH8N_JM | 30 | 2 | 22 | Continuous | 230 / 460 V | 60 | 3600 |

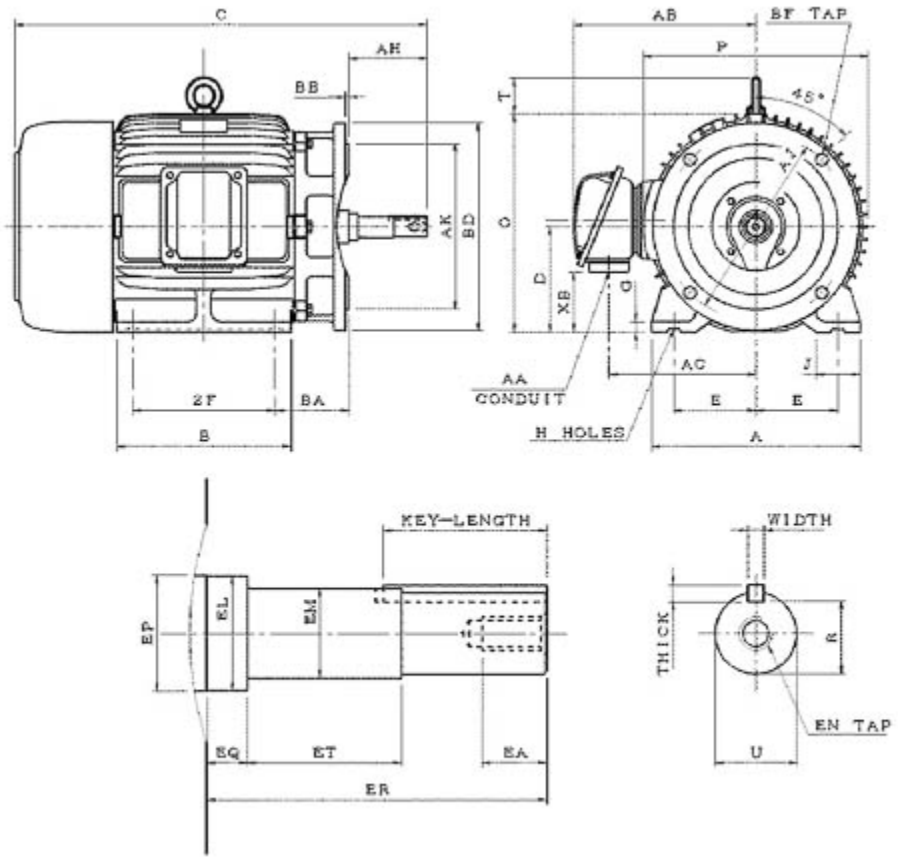


AEHH8N-JM-SWP-5

| Frame Size | Mounting | | | | | A | B | C | CD | D |
|---|---|---|---|---|---|---|---|---|---|---|
| | E | 2F | 2F2 | H | BA | | | | | |
| 286JM | 5.5 | 11 | | 0.53 | 4.95 | 13.98 | 13.19 | 29.13 | | 7 |

| G | J | K | L | M | O | P | T | Key | | | Keyseat |
|---|---|---|---|---|---|---|---|---|---|---|---|
| | | | | | | | | Width | Thick | Length | R |
| 0.7 | 2.95 | | | | 14.5 | 15.04 | 2.36 | 0.25 | 0.25 | 2.52 | 1.112 |

| Terminal Housing | | | | Aux Box | | C/D Flange | | | | | |
|---|---|---|---|---|---|---|---|---|---|---|---|
| AA | AB | AC | XB | AE | AX | BB | AH | AK | BD | AJ | BF |
| 11/2" | 12.28 | 9.84 | 3.97 | | | 0.2 | 5.25 | 12.5 | 13.78 | 11 | 4-5/8"-11UNC |

| Shaft Extension | | | Bearings | | Approx. Weight Lbs | SPL dBA/3ft | Ins. Class | S.F. | Drive Method | Dimensions |
|---|---|---|---|---|---|---|---|---|---|---|
| N-W | U | V | DE | NDE | | | | | | |
| | 1.25 | | 6211C3 | 6211C3 | 482 | 77 | F | 1.15 | DirectCoupling | Inches |

| TECO Westinghouse MOTORS (CANADA) INC. | |
|---|---|
| | |
| | |
| | |
| | Date: November 29, 2016 |

# Technical Data Sheet

| Motor Type: AEHH8N_JM | Catalogue No: CJM0302 |
|---|---|

## Nameplate Information

| HP | Pole | RPM | Frame | Voltage | Hz | Phase |
|---|---|---|---|---|---|---|
| 30 | 2 | 3545 | 286JM | 230 / 460 | 60 | 3 |
| | | | | | | |
| Enclosure | Ins. Class | Service Factor | Time Rating | NEMA Design | Rated Amb. | Rated Altitude |
| TEFC | F | 1.15 | Continuous | B | -40 to 40 °C | <3300 ft |

## Typical Performance

| Efficiency (%) | | | | Power Factor (%) | | |
|---|---|---|---|---|---|---|
| Full Load | | 3/4 Load | 1/2 Load | Full Load | 3/4 Load | 1/2 Load |
| Nom. | Min. | | | | | |
| 93.0 | 91.7 | 93.6 | 93.0 | 91.0 | 90.5 | 87.5 |
| | | | | | | |
| Torque | | | | Current (A) | | |
| Full Load (lb-ft) | Locked Rotor (% FLT) | Pull Up (% FLT) | Break Down (% FLT) | No Load | Full Load | Locked Rotor |
| 44.43 | 175 | 140 | 240 | 12.1 / 6.0 | 66.4 / 33.2 | 436 / 218 |
| | | | | | | |
| NEMA KVA Code | Inertia ($WR^2$) | | | Safe Stall Time (s) | | Noise Level Sound Press. dB(A) |
| | Rotor ($lb\text{-}ft^2$) | NEMA Load ($lb\text{-}ft^2$) | Max. Allowable ($lb\text{-}ft^2$) | Cold | Hot | |
| G | 2.831 | 30 | 73 | 24 | 17 | 77 |

## VFD Duty Information

| Speed Range | | | VFD | | S.F. |
|---|---|---|---|---|---|
| Constant Torque | Variable Torque | Constant Power | Carrier | Type | |
| 6-60Hz | 3-60Hz | 60-90Hz | ≤ 5 kHz | VPWM or CPWM | 1.0 Only |

## Additional Information

| Bearings | | Approx. Weight |
|---|---|---|
| DE | NDE | lbs |
| 6211C3 | 6211C3 | 482 |

## Hazardous Locations Information

| CSA Certified | |
|---|---|
| Class I, Div 2, Groups B, C & D<br>Class I, Zone 2, Groups IIB+H2, IIB & IIA | |
| Temp Code (Sinewave / VFD) | T3C / T3B |

## Connection Diagram

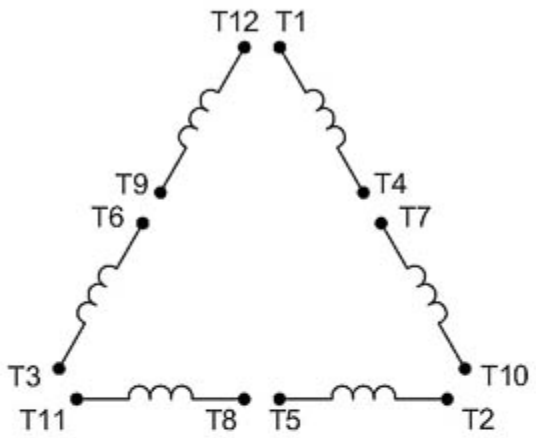


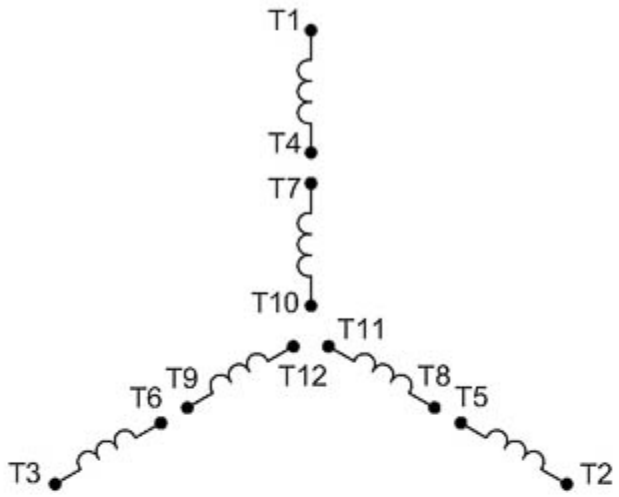


| 12 LEAD DUAL VOLTAGE WYE/DELTA | | | | | | |
|---|---|---|---|---|---|---|
| VOLTAGE | CONNECTION | | L1 | L2 | L3 | JOIN |
| HIGH | START | WYE | 1 | 2 | 3 | 4&7,5&8,6&9<br>10&11&12 |
| | RUN | DELTA | 1,12 | 2,10 | 3,11 | 4&7,5&8,6&9 |
| LOW | START | 2 WYE | 1,7 | 2,8 | 3,9 | 4&5&6<br>10&11&12 |
| | RUN | 2 DELTA | 1,6,7<br>12 | 2,4,8<br>10 | 3,5,9<br>11 | |

WD_12YD

| | |
|---|---|
| TECO Westinghouse MOTORS (CANADA) INC. | |
| | |
| | |
| | Date: November 29, 2016 |

## Thermal Limit Curves

| Motor Type: AEHH8N_JM | | Catalogue No: CJM0302 | | Family: Optim JM | |
|---|---|---|---|---|---|
| HP | 30 | Safe Stall Time | | Full Load A | 66.4 / 33.2 A |
| Voltage | 230 / 460V 60Hz | Hot | 17 s | Locked Rotor A | 657 / 657 % |
| RPM | 3600 | Cold | 24 s | Locked Rotor A | 436.0 / 218 A |

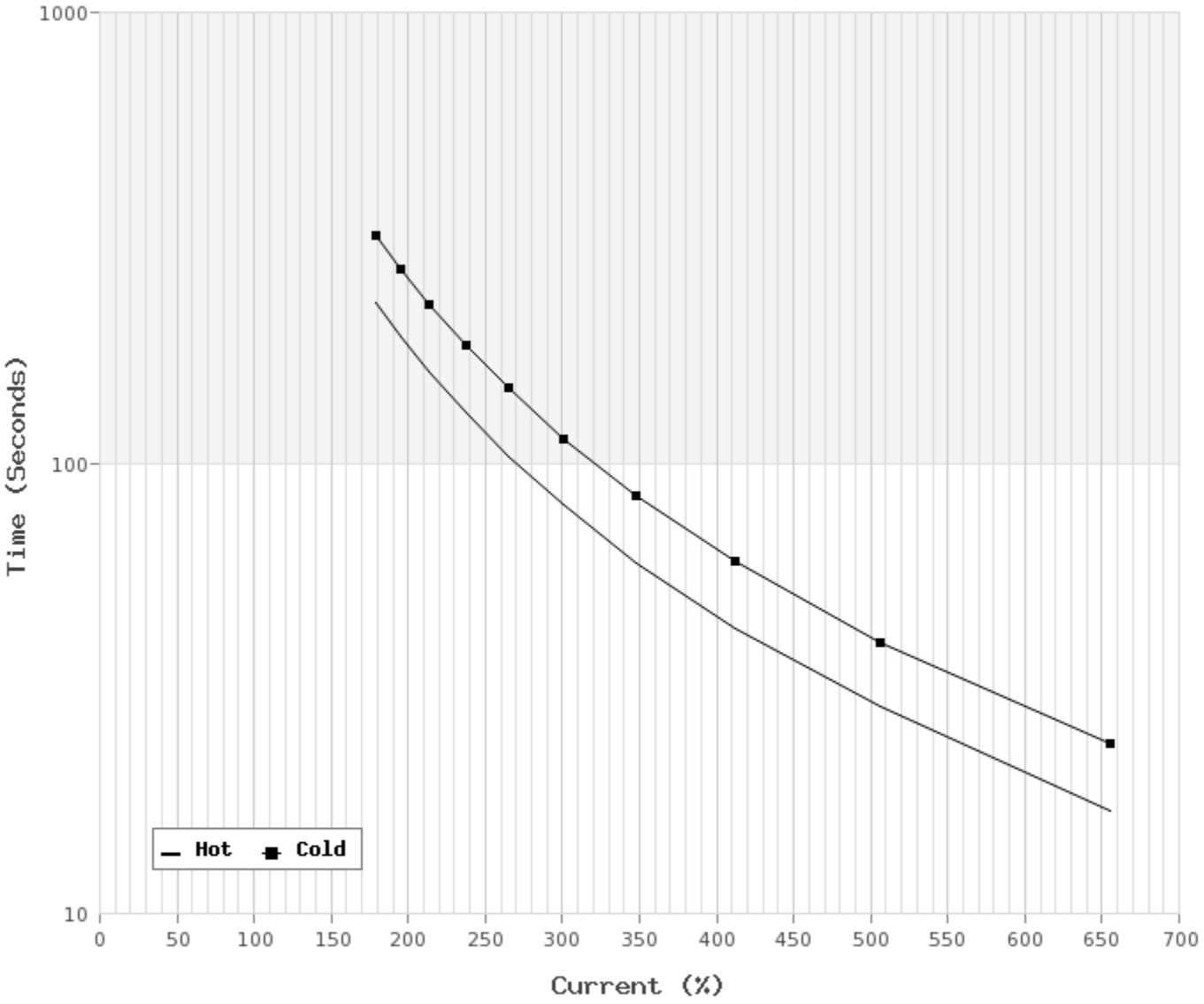

| | |
|---|---|
| TECO Westinghouse MOTORS (CANADA) INC. | |
| | |
| | |
| | Date: November 29, 2016 |

## T-N and I-N Curves
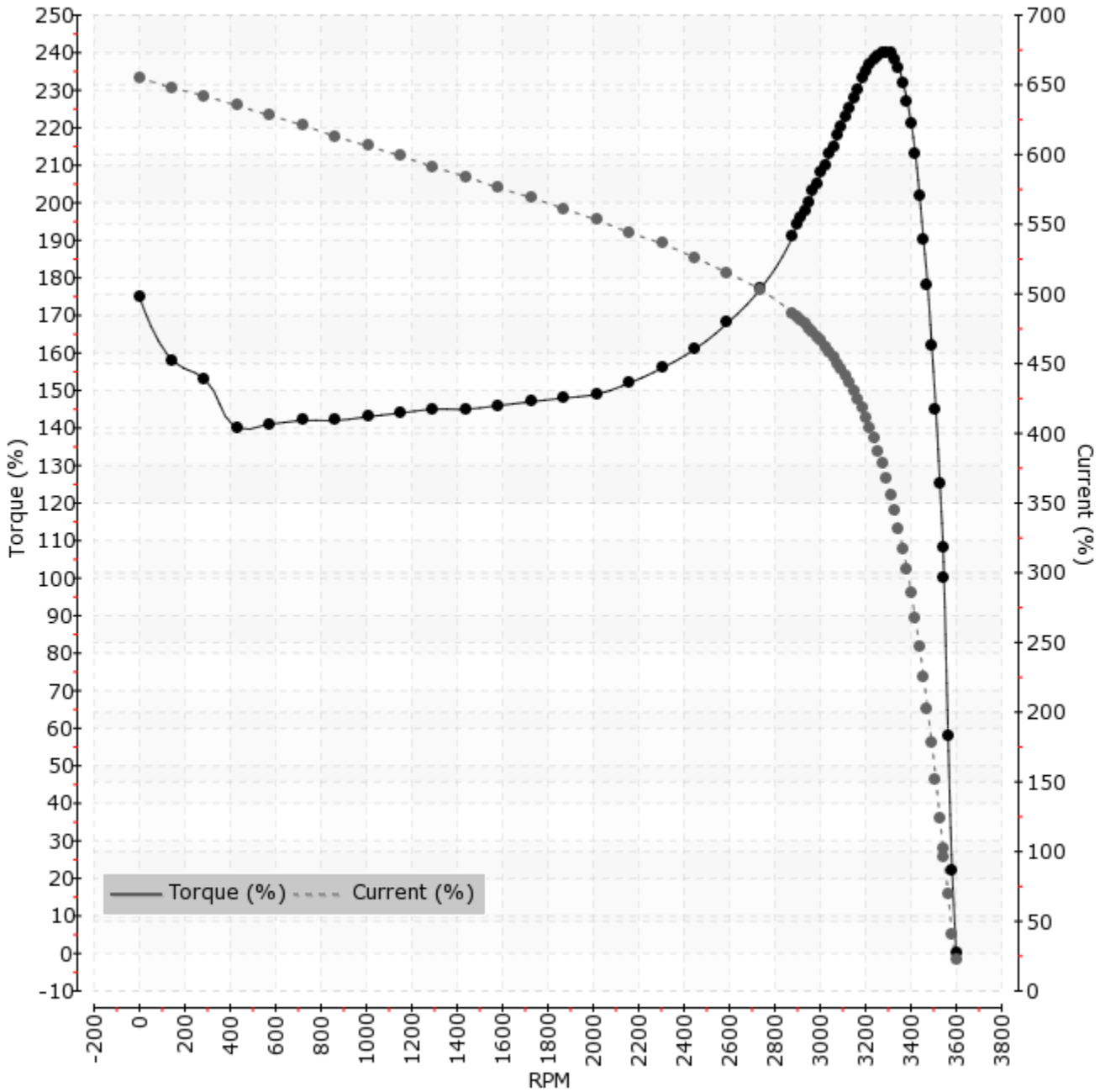
| Motor Type: AEHH8N_JM | | Catalogue No: CJM0302 | | Family: Optim JM | |
|---|---|---|---|---|---|
| HP | 30 | Full Load T | 44.43 lb-ft | Full Load A | 66.4 / 33.2 A |
| Voltage | 230 / 460V 60Hz | Locked Rotor T | 175 % | Locked Rotor A | 436.0 / 218.0 A |
| RPM | 3600 | Pull Up T | 140 % | Break Down T | 240 % |