Technical Documentation

APH03065

Advantage Plus IEEE Ready | AEHH8R

Date: June 26, 2020

TECO Westinghouse MOTORS (CANADA) INC.	
	Date: June 26, 2020

Dimensional Drawing

Catalogue	Model	HP	Pole	kW	Rating	Voltage	Hz	RPM
APH03065	AEHH8R	30	6	22	Continuous	575	60	1200

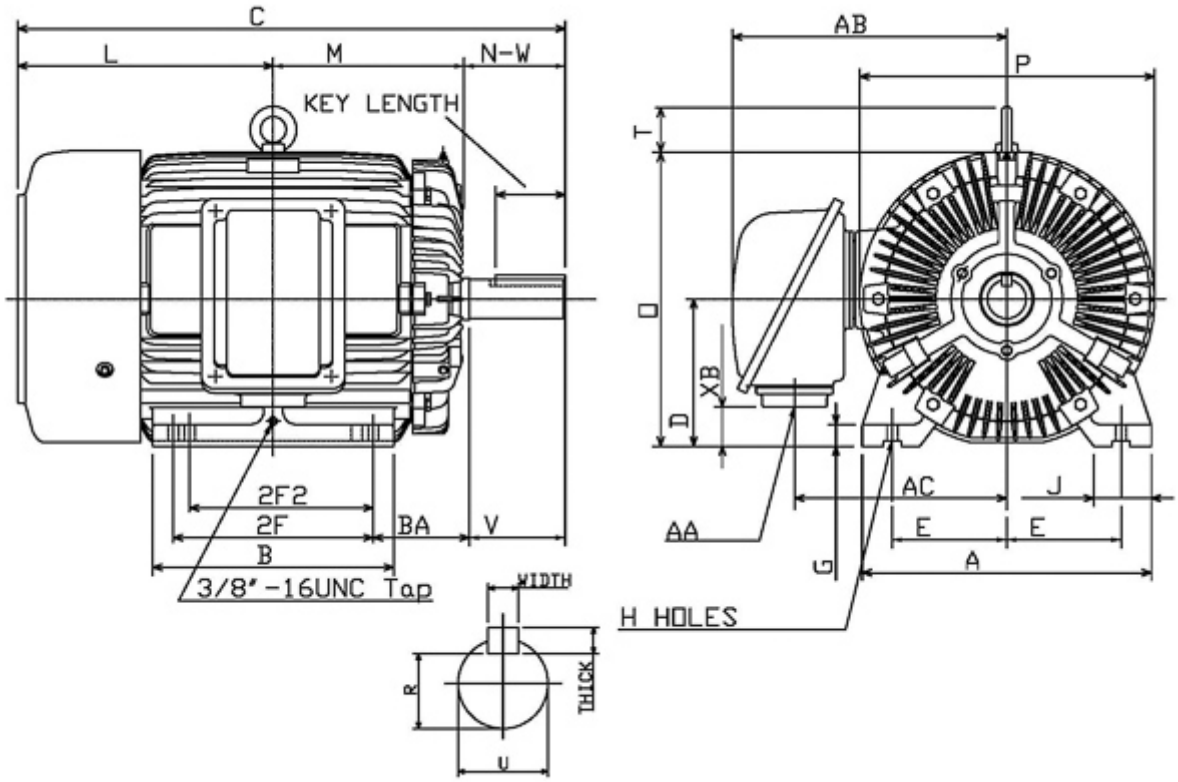

Frame Size	Mounting					A	B	C	CD	D
	E	2F	2F2	H	BA					
326T	6.25	12	10.5	0.66	5.25	15.75	14.37	31.43		8

G	J	K	L	M	O	P	T	Key			Keyseat
								Width	Thick	Length	R
1.1	3.15		14.93	10.85	16.22	16.55	2.36	0.5	0.5	3.91	1.845

Terminal Housing				Aux Box		C/D Flange					
AA	AB	AC	XB	AE	AX	BB	AH	AK	BD	AJ	BF
NPT2"	14.72	11.3	3.59								

Shaft Extension			Bearings		Approx. Weight Lbs	SPL dBA/3ft	Ins. Class	S.F.	Drive Method	Dimensions
N-W	U	V	DE	NDE						
5.25	2.125	5.15	6312ZC3	6212ZC3	675	72	F	1.15	Direct Coupling / Belt Drive	Inches

TECO Westinghouse MOTORS (CANADA) INC.	
	Date: June 26, 2020

Technical Data Sheet

Motor Type: AEHH8R	Catalogue No: APH03065

Nameplate Information

HP	Pole	RPM	Frame	Voltage	Hz	Phase
30	6	1175	326T	575	60	3
Enclosure	Ins. Class	Service Factor	Time Rating	NEMA Design	Rated Amb.	Rated Altitude
TEFC	F	1.15	Continuous	B	-40 to 40 °C	<1000 m

Typical Performance

Efficiency (%)				Power Factor (%)		
Full Load		3/4 Load	1/2 Load	Full Load	3/4 Load	1/2 Load
Nom.	Min.					
93.0	91.7	93.6	93.6	80.5	78.5	71.0
Torque				Current (A)		
Full Load (lb-ft)	Locked Rotor (% FLT)	Pull Up (% FLT)	Break Down (% FLT)	No Load	Full Load	Locked Rotor
134.10	210	180	230	9.3	30.0	174
NEMA KVA Code	Inertia (WR^2)			Safe Stall Time (s)		Noise Level Sound Press. dB(A)
	Rotor ($lb\text{-}ft^2$)	NEMA Load ($lb\text{-}ft^2$)	Max. Allowable ($lb\text{-}ft^2$)	Cold	Hot	
G	12.372	384.00	636.00	17	12	72

VFD Duty Information

Speed Range			VFD		S.F.
Constant Torque	Variable Torque	Constant Power	Carrier	Type	
6-60Hz	3-60Hz	60-120Hz	≤ 5 kHz	VPWM or CPWM	1.0 Only

Hazardous Locations Information

CSA Certified	
Class I, Div 2, Groups B, C & D Class I, Zone 2, Groups IIB+H2, IIB & IIA	
Temp Code (Sinewave / VFD)	T3C / T3B

Additional Certifications

Other Certification
Class II, Div 2, Groups F & G

Additional Information

Bearings		Approx. Weight
DE	NDE	lbs
6312ZC3	6212ZC3	675

Nameplate Drawing

Advantage Plus IEEE Ready

TYPE	AEHH8R	CAT. NO.	APH03065		
OUTPUT	30 HP 22 kW	FRAME	326T	TEFC	
R.P.M.	1175	POLE	6	INS.	F
VOLTS	575	PHASE	3	Hz	60
AMPS	30.0	CODE	G	S.F.	1.15
AMBIENT	40 °C	NOM. EFF. 93.0		MIN. EFF. 91.7	
BEARINGS	6312ZC3 / 6212ZC3			RATING Cont.	

SER. NO.	TBD	DESIGN	B	WT. 675 LBS

PWM VFD DUTY	VT	CT	CP	S.F.
	3-60Hz	6-60Hz	60-120Hz	1.0 Only

Connection Diagram

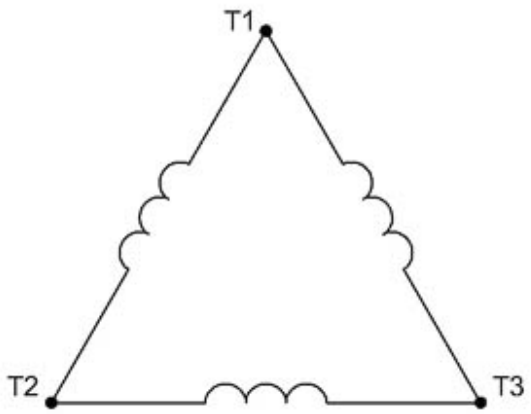

3 LEAD SINGLE VOLTAGE DELTA					
VOLTAGE	CONN.	L1	L2	L3	
-	DELTA	1	2	3	

WD_3D

TECO Westinghouse MOTORS (CANADA) INC.	
	Date: June 26, 2020

Thermal Limit Curves

Motor Type: AEHH8R		Catalogue No: APH03065		Family: Advantage Plus IEEE Ready	
HP	30	Safe Stall Time		Full Load A	30.0 A
Voltage	575V 60Hz	Hot	12 s	% Inrush	580 %
RPM	1200	Cold	17 s	Locked Rotor A	174 A

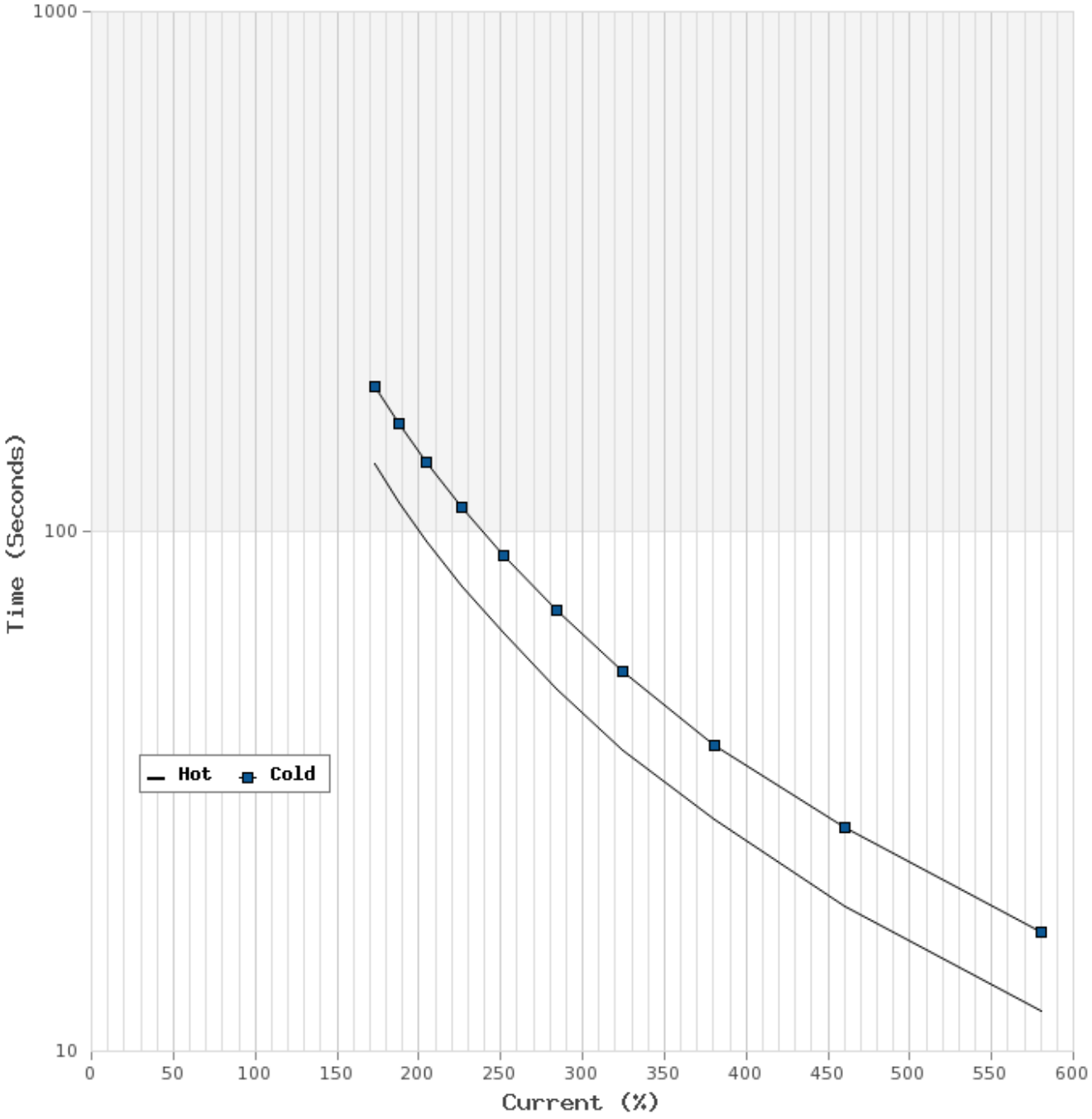

TECO Westinghouse MOTORS (CANADA) INC.	
	Date: June 26, 2020

T-N and I-N Curves
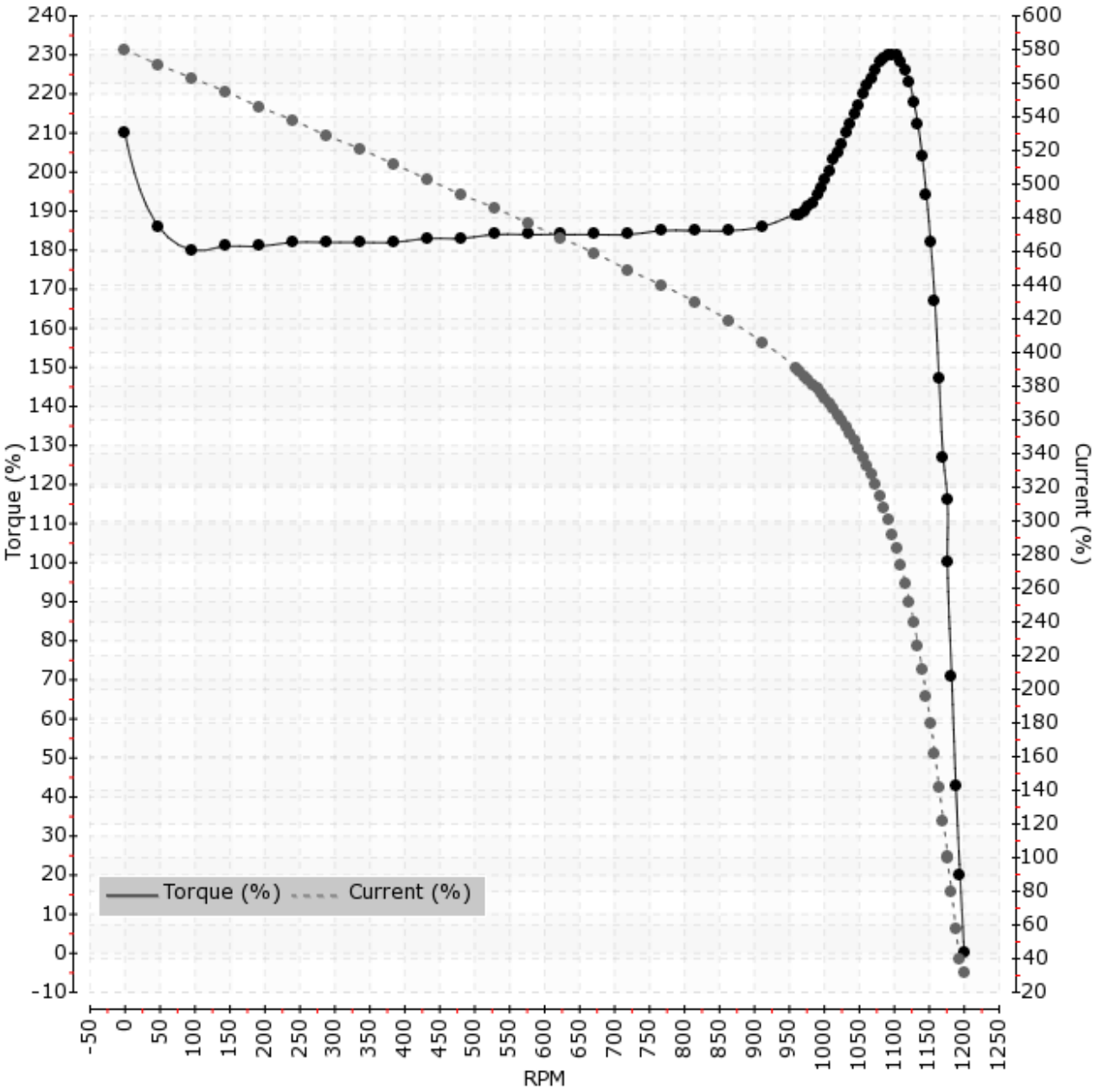
Motor Type: AEHH8R		Catalogue No: APH03065		Family: Advantage Plus IEEE Ready	
HP	30	Full Load T	134.10 lb-ft	Full Load A	30.0 A
Voltage	575V 60Hz	Locked Rotor T	210 %	Locked Rotor A	174.0 A
RPM	1200	Pull Up T	180 %	Break Down T	230 %