Technical Documentation

PDH12565

Optim TEFC | AEHH8N

Date: July 10, 2017

TECO Westinghouse MOTORS (CANADA) INC.	
	Date: July 10, 2017

Dimensional Drawing

Catalogue	Model	HP	Pole	kW	Rating	Voltage	Hz	RPM
PDH12565	AEHH8N	125	6	93	Continuous	575 V	60	1200

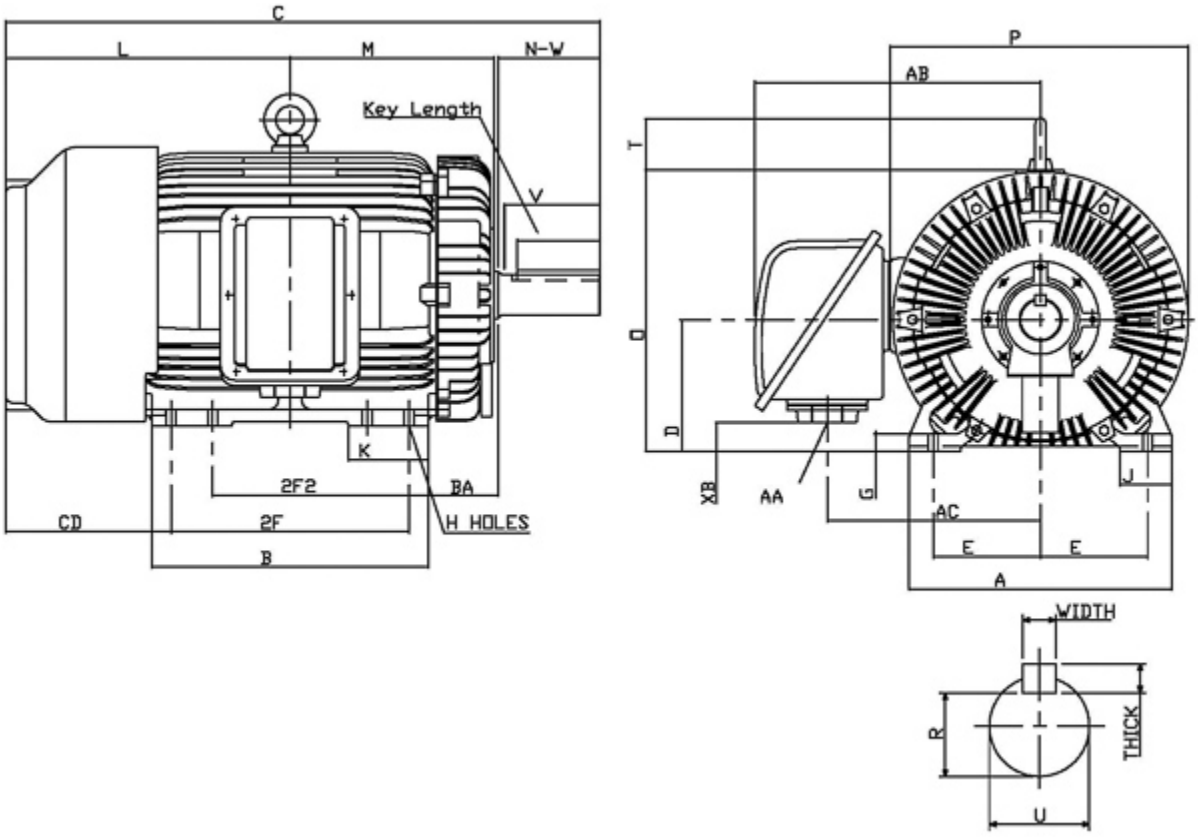

Frame Size	Mounting					A	B	C	CD	D
	E	2F	2F2	H	BA					
445T	9	16.5	14.5	0.81	7.5	22.05	19.5	46.4	13.9	11

G	J	K	L	M	O	P	T	Key			Keyseat
								Width	Thick	Length	R
1.4	4.35	5.1	22.15	15.4	23.55	24.75	4.35	0.875	0.875	6.91	2.88

Terminal Housing				Aux Box		C/D Flange					
AA	AB	AC	XB	AE	AX	BB	AH	AK	BD	AJ	BF
3 NPT	24	17.9	2.4								

Shaft Extension			Bearings		Approx. Weight Lbs	SPL dBA/3ft	Ins. Class	S.F.	Drive Method	Dimensions
N-W	U	V	DE	NDE						
8.5	3.375	8	6318	6316	1903	77	F	1.15	Direct Coupling / Belt Drive	Inches

TECO Westinghouse MOTORS (CANADA) INC.	
	Date: July 10, 2017

Technical Data Sheet

Motor Type: AEHH8N	Catalogue No: PDH12565

Nameplate Information

HP	Pole	RPM	Frame	Voltage	Hz	Phase
125	6	1185	445T	575	60	3
Enclosure	Ins. Class	Service Factor	Time Rating	NEMA Design	Rated Amb.	Rated Altitude
TEFC	F	1.15	Continuous	B	-40 to 40 °C	<3300 ft

Typical Performance

Efficiency (%)				Power Factor (%)		
Full Load		3/4 Load	1/2 Load	Full Load	3/4 Load	1/2 Load
Nom.	Min.					
95.0	94.1	94.5	93.6	83.0	80.5	74.0
Torque				Current (A)		
Full Load (lb-ft)	Locked Rotor (% FLT)	Pull Up (% FLT)	Break Down (% FLT)	No Load	Full Load	Locked Rotor
554.00	140	110	230	47.8	118.8	726
NEMA KVA Code	Inertia (WR^2)			Safe Stall Time (s)		Noise Level Sound Press. dB(A)
	Rotor ($lb\text{-}ft^2$)	NEMA Load ($lb\text{-}ft^2$)	Max. Allowable ($lb\text{-}ft^2$)	Cold	Hot	
0	68.000	1452.0	3630.0	17	12	77

VFD Duty Information

Speed Range			VFD		S.F.
Constant Torque	Variable Torque	Constant Power	Carrier	Type	
12-60Hz	3-60Hz	60-90Hz	≤ 5 kHz	VPWM or CPWM	1.0 Only

Additional Information

Bearings		Approx. Weight
DE	NDE	lbs
6318	6316	1903

Hazardous Locations Information

CSA Certified	
Class I, Div 2, Groups B, C & D Class I, Zone 2, Groups IIB+H2, IIB & IIA	
Temp Code (Sinewave / VFD)	T3C / T3

TECO Westinghouse MOTORS (CANADA) INC.	
	Date: July 10, 2017

Nameplate Drawing

Optim TEFC

TYPE	AEHH8N	CAT. NO.	PDH12565		
OUTPUT	125 HP 93 kW	FRAME	445T	TEFC	
R.P.M.	1185	POLE	6	INS.	F
VOLTS	575	PHASE	3	Hz	60
AMPS	118.8	CODE	0	S.F.	1.15
AMBIENT	40 °C	NOM. EFF. 95.0		MIN. EFF. 94.1	
BEARINGS	6318 / 6316			RATING Cont.	

SER. NO.	TBD	DESIGN	B	WT. 1903 LBS

PWM VFD DUTY	VT	CT	CP	S.F.
	3-60Hz	12-60Hz	60-90Hz	1.0 Only

Connection Diagram

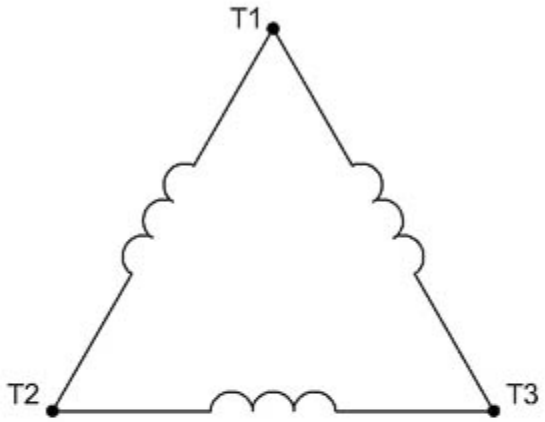

3 LEAD SINGLE VOLTAGE DELTA					
VOLTAGE	CONN.	L1	L2	L3	
-	DELTA	1	2	3	

WD_3D

TECO Westinghouse MOTORS (CANADA) INC.	
	Date: July 10, 2017

Thermal Limit Curves

Motor Type: AEHH8N		Catalogue No: PDH12565		Family: Optim TEFC	
HP	125	Safe Stall Time		Full Load A	0.0 / 118.8 A
Voltage	0 / 575V 60Hz	Hot	12 s	Locked Rotor A	611 %
RPM	1200	Cold	17 s	Locked Rotor A	0.0 / 726 A

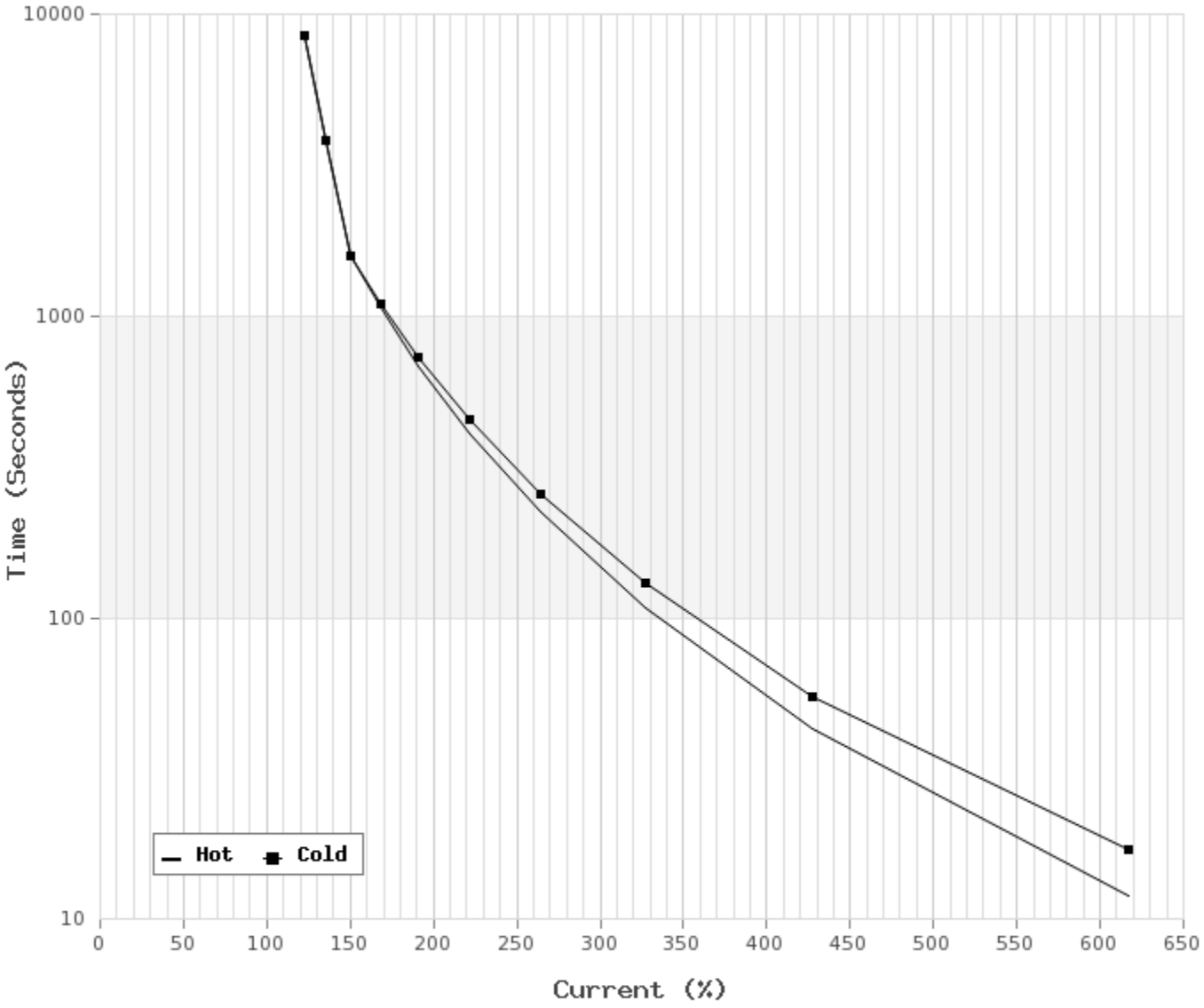

TECO Westinghouse MOTORS (CANADA) INC.	
	Date: July 10, 2017

T-N and I-N Curves

Motor Type: AEHH8N	Catalogue No: PDH12565	Family: Optim TEFC
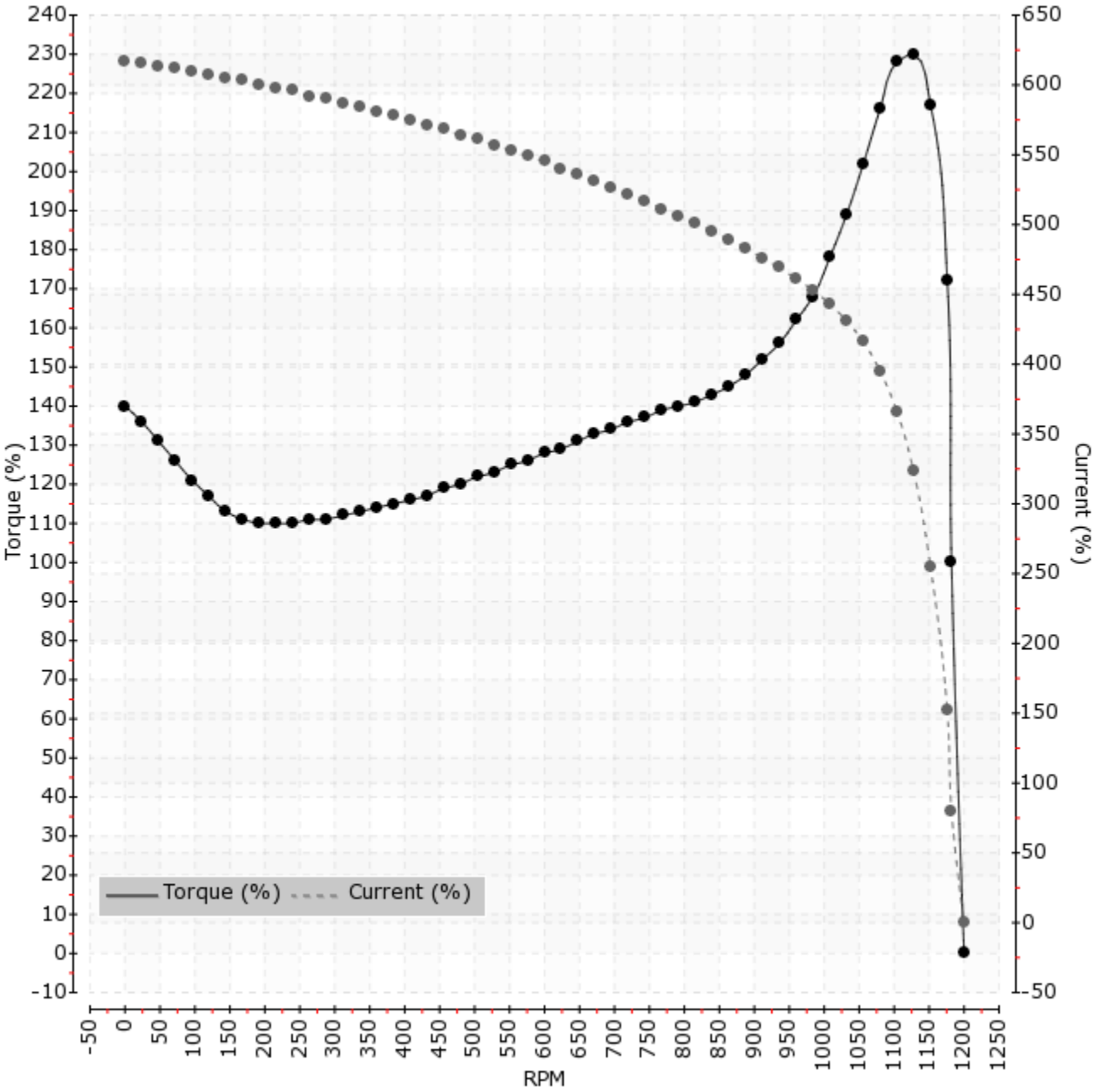
HP	125	Full Load T	554.00 lb-ft	Full Load A	118.8 A
Voltage	575V 60Hz	Locked Rotor T	140 %	Locked Rotor A	726.0 A
RPM	1200	Pull Up T	110 %	Break Down T	230 %