Technical Documentation

PDH00545C

Optim TEFC | AEHH8N

Date: November 30, 2016

TECO Westinghouse MOTORS (CANADA) INC.	
	Date: November 30, 2016

Dimensional Drawing

Catalogue	Model	HP	Pole	kW	Rating	Voltage	Hz	RPM
PDH00545C	AEHH8N	5	4	3.7	Continuous	575 V	60	1800

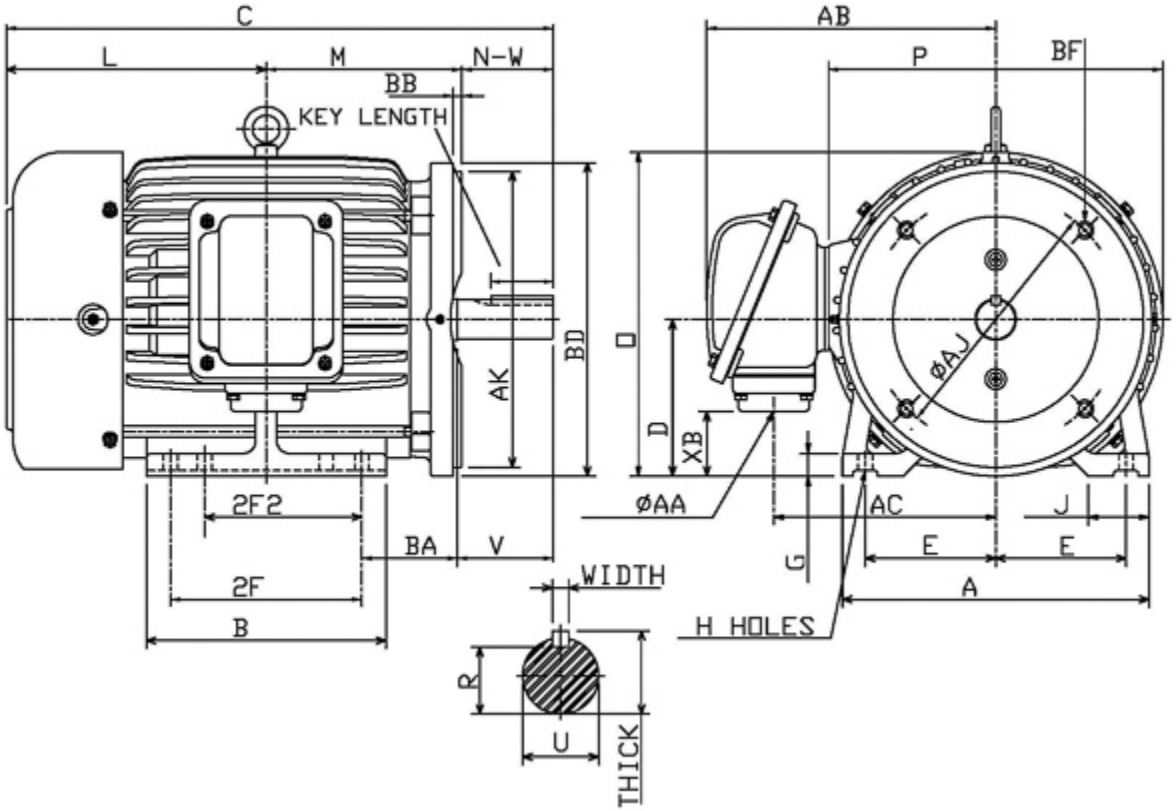

Frame Size	Mounting					A	B	C	CD	D
	E	2F	2F2	H	BA					
184TC	3.75	5.5	4.5	0.41	2.75	8.8	6.9	15.73		4.5

G	J	K	L	M	O	P	T	Key			Keyseat
								Width	Thick	Length	R
0.65	1.75		7.48	5.37	9.31	9.61	1.19	0.25	0.25	1.78	0.986

Terminal Housing				Aux Box		C/D Flange					
AA	AB	AC	XB	AE	AX	BB	AH	AK	BD	AJ	BF
3/4 NPT	8.31	6.38	1.86			0.25	2.62	8.5	9	7.25	1/2-13UNC

Shaft Extension			Bearings		Approx. Weight Lbs	SPL dBA/3ft	Ins. Class	S.F.	Drive Method	Dimensions
N-W	U	V	DE	NDE						
2.75	1.125	2.7	6306ZZ	6306ZZ	110	54	F	1.15	Direct Coupling / Belt Drive	Inches

TECO Westinghouse MOTORS (CANADA) INC.	
	Date: November 30, 2016

Technical Data Sheet

Motor Type: AEHH8N	Catalogue No: PDH00545C

Nameplate Information

HP	Pole	RPM	Frame	Voltage	Hz	Phase
5	4	1745	184TC	575	60	3
Enclosure	Ins. Class	Service Factor	Time Rating	NEMA Design	Rated Amb.	Rated Altitude
TEFC	F	1.15	Continuous	B	-40 to 40 °C	<3300 ft

Typical Performance

Efficiency (%)				Power Factor (%)		
Full Load		3/4 Load	1/2 Load	Full Load	3/4 Load	1/2 Load
Nom.	Min.					
89.5	87.5	88.5	88.5	85.5	81.5	71.5
Torque				Current (A)		
Full Load (lb-ft)	Locked Rotor (% FLT)	Pull Up (% FLT)	Break Down (% FLT)	No Load	Full Load	Locked Rotor
15.04	185	140	285	1.8	4.9	37
NEMA KVA Code	Inertia (WR^2)			Safe Stall Time (s)		Noise Level Sound Press. dB(A)
	Rotor ($lb\text{-}ft^2$)	NEMA Load ($lb\text{-}ft^2$)	Max. Allowable ($lb\text{-}ft^2$)	Cold	Hot	
J	0.422	27.0	88.0	35	25	54

VFD Duty Information

Speed Range			VFD		S.F.
Constant Torque	Variable Torque	Constant Power	Carrier	Type	
6-60Hz	3-60Hz	60-120Hz	≤ 5 kHz	VPWM or CPWM	1.0 Only

Additional Information

Bearings		Approx. Weight
DE	NDE	lbs
6306ZZ	6306ZZ	110

Hazardous Locations Information

CSA Certified	
Class I, Div 2, Groups B, C & D Class I, Zone 2, Groups IIB+H2, IIB & IIA	
Temp Code (Sinewave / VFD)	T3C / T3C

Connection Diagram

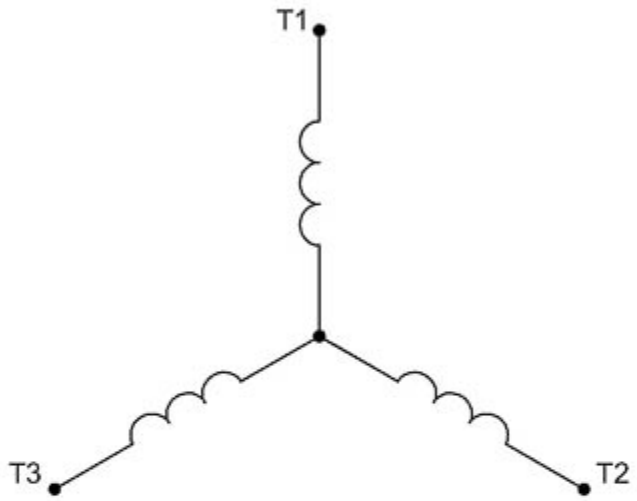

3 LEAD SINGLE VOLTAGE WYE					
VOLTAGE	CONN.	L1	L2	L3	
-	WYE	1	2	3	

WD_3Y

TECO Westinghouse MOTORS (CANADA) INC.	
	Date: November 30, 2016

Thermal Limit Curves

Motor Type: AEHH8N		Catalogue No: PDH00545C		Family: Optim TEFC	
HP	5	Safe Stall Time		Full Load A	0.0 / 4.9 A
Voltage	0 / 575V 60Hz	Hot	25 s	Locked Rotor A	757 %
RPM	1800	Cold	35 s	Locked Rotor A	0.0 / 37 A

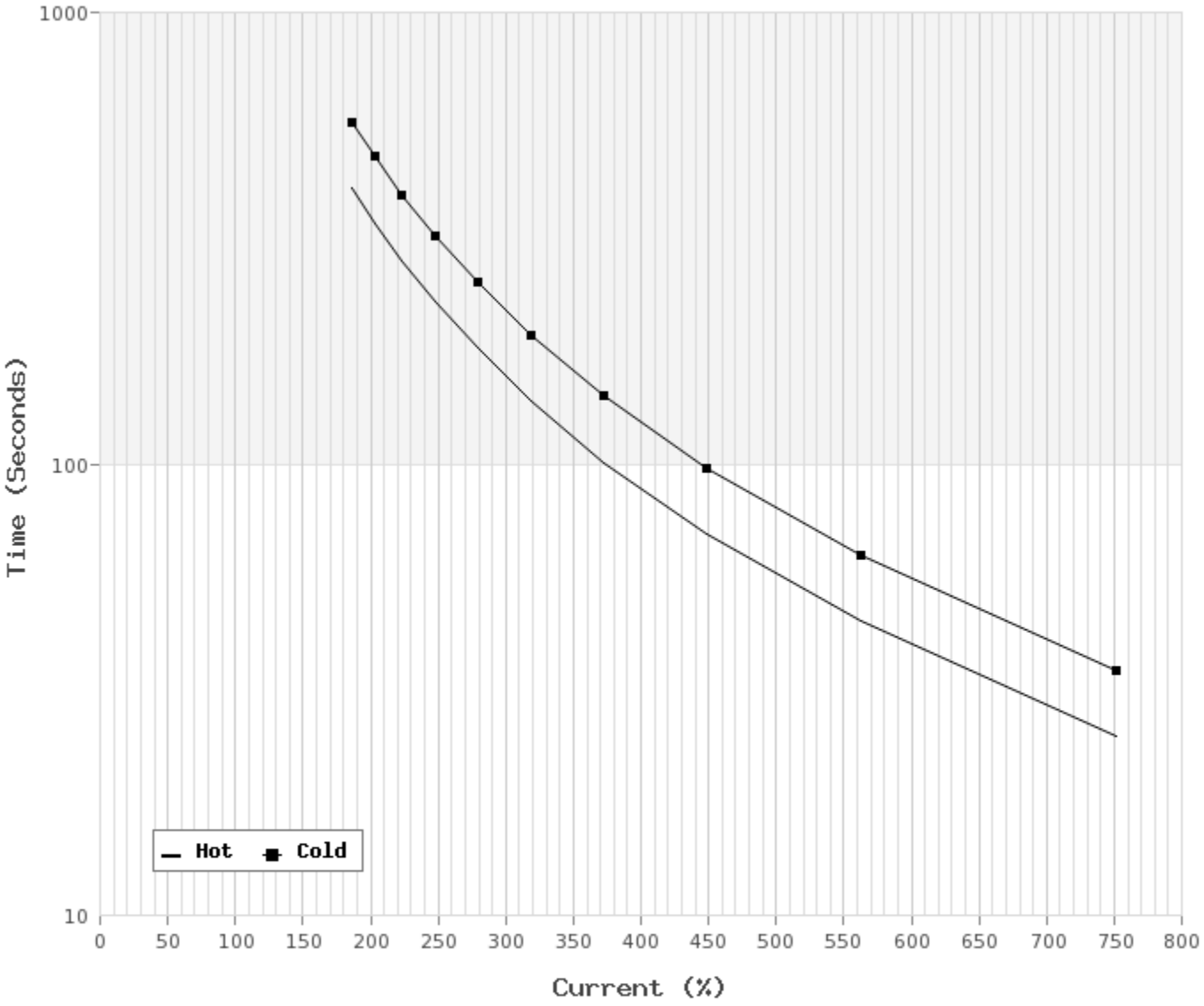

TECO Westinghouse MOTORS (CANADA) INC.	
	Date: November 30, 2016

T-N and I-N Curves
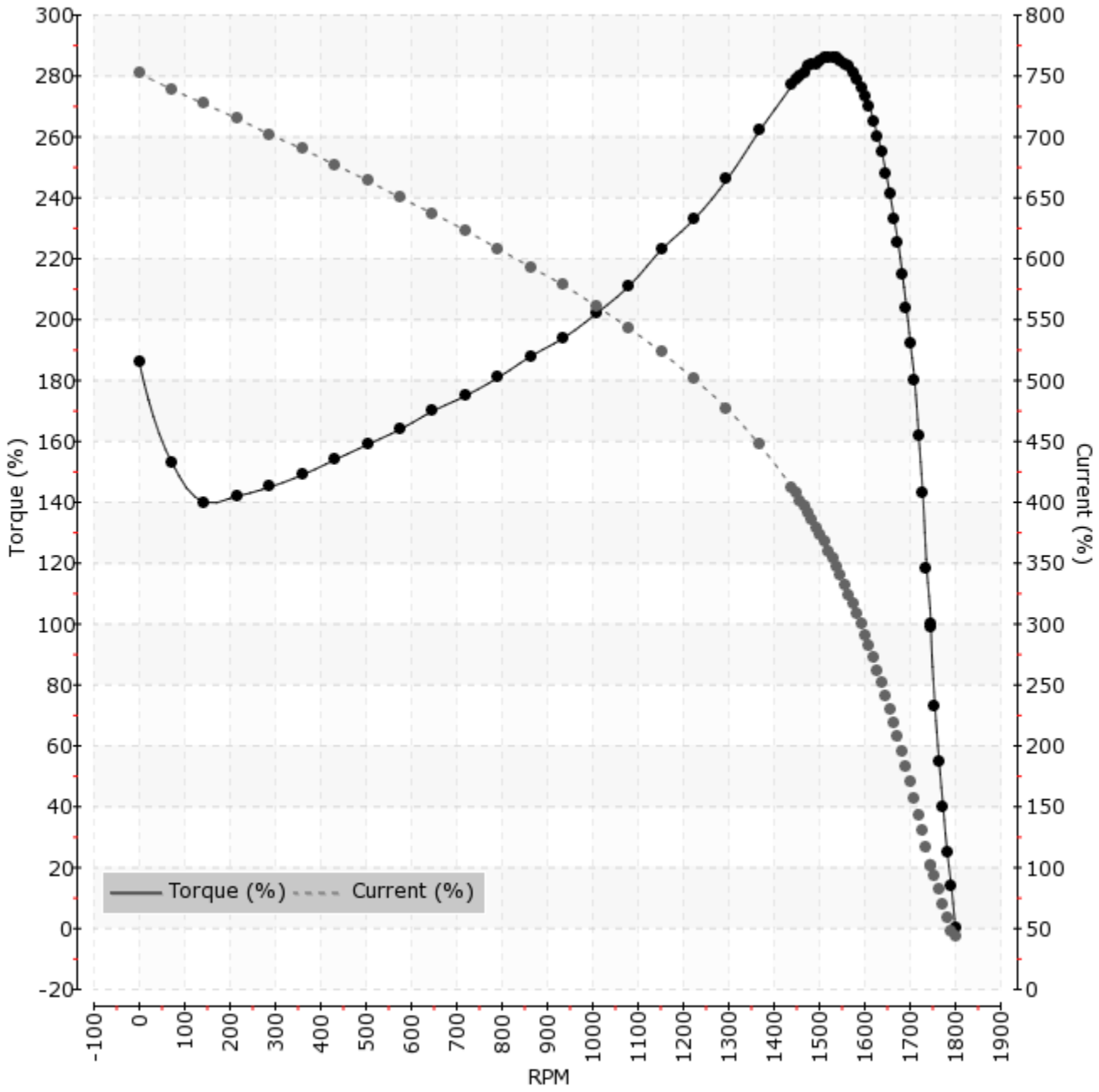
Motor Type: AEHH8N		Catalogue No: PDH00545C		Family: Optim TEFC	
HP	5	Full Load T	15.04 lb-ft	Full Load A	4.9 A
Voltage	575V 60Hz	Locked Rotor T	185 %	Locked Rotor A	37.0 A
RPM	1800	Pull Up T	140 %	Break Down T	285 %