POLE	HP	kW	Hz	VOLT	r/min(RPM)	INS	RATING	DIMENSION IN	APPROX WEIGHT	BEARINGS
						F	CONT.	INCH		DE: 6314C3 NDE: 6314/C3VL0241

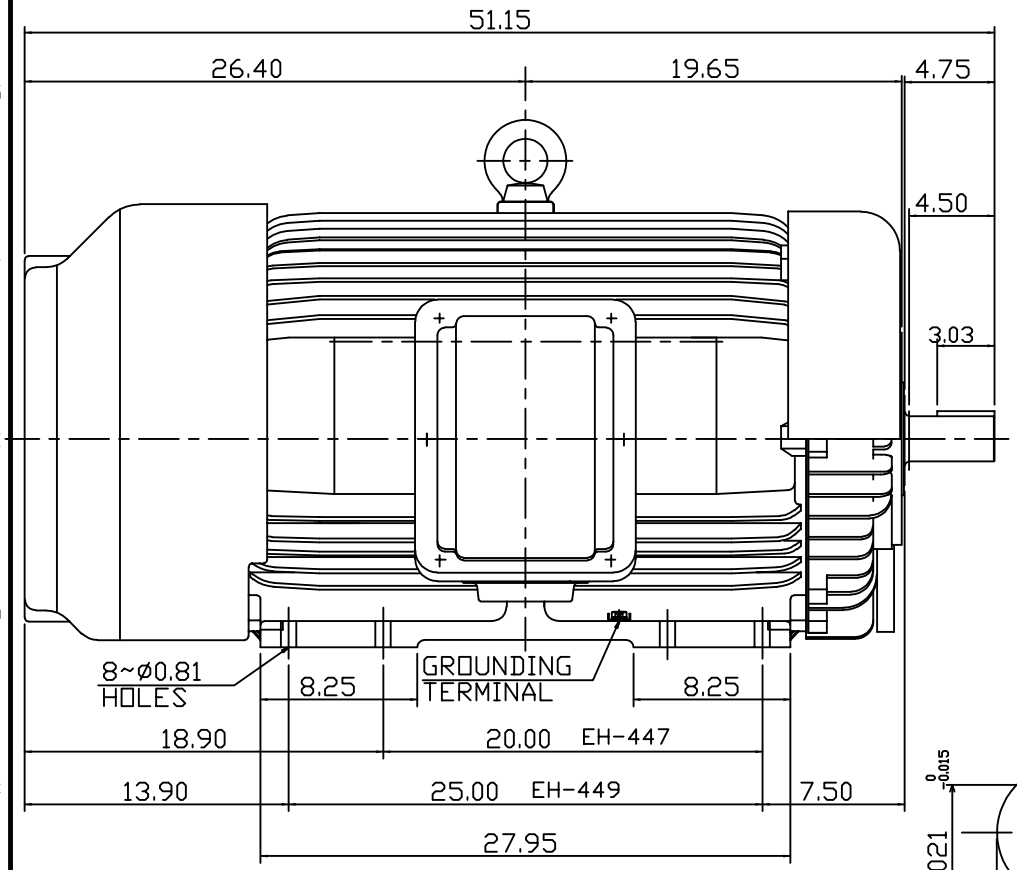

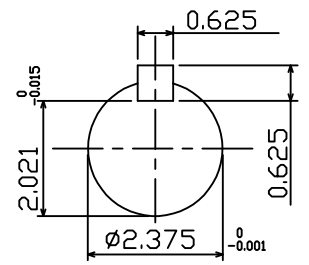

SHAFT END
ENLARGED VIEW

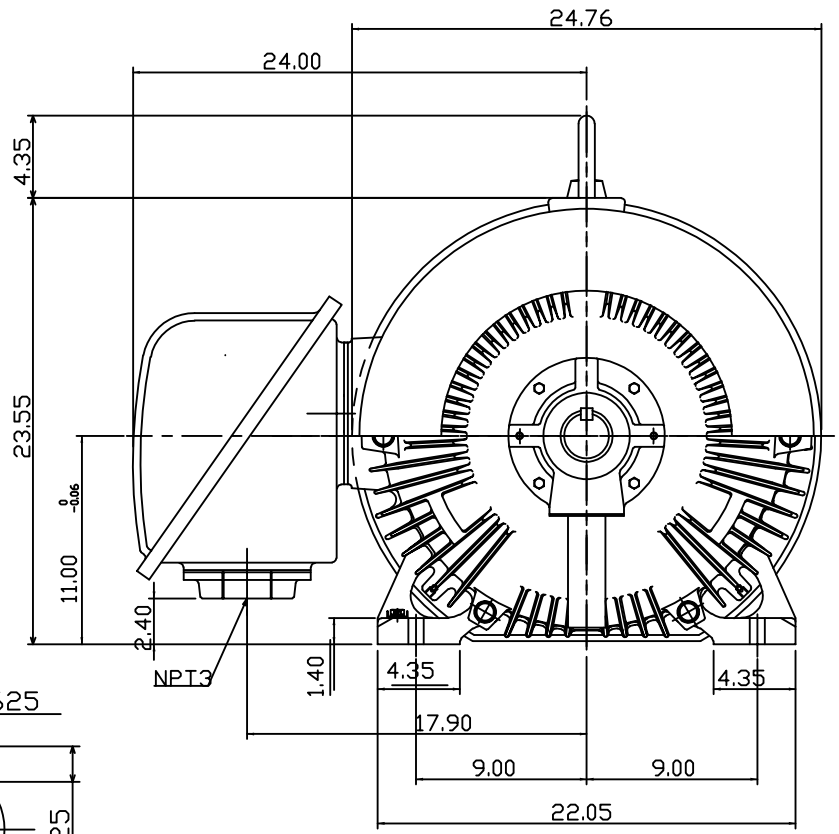

OUTLINE DIMENSIONS
3-PHASE INDUCTION MOTOR

MOTOR TYPE	AEHH8B	FRAME NO.	449TS
CUSTOMER		DATE	
ORDER NO.		TRANS. SHEET	TA1528B

APPD.	C.H.SHYU	12-03-15
CHKD.	C.H.SHYU	12-03-15
DWG.	S.M.CHIEN	12-02-15

TECO Westinghouse

DWG NO.
31057G004750