W22 P-Base Motors - NEMA Premium

TEFC

Standard Features

- Motors are compliant with DOE and NRCAN
- Three-phase, 2, 4, 6 and 8 pole, 60Hz
- Voltage: 208-230/460V, 575V
- Totally Enclosed Fan Cooled - TEFC (IP55) waterproof as per NEMA MG1 1.26.6 “Waterproof Machine”
- Die cast aluminum squirrel cage rotor
- Sealing: V’Ring
- Ball bearings
- 1045 heat treated and stress relieved carbon steel shaft
- Class “F” insulation for all frames. Temperature rise limited to Class “B” (80K)
- 575V rated motors have Spike Resistant WISE wire.
  - Protects against IGBT voltage spikes up to 2400V.
  - Exceeds NEMA MG1 Part 31.4.4.2
- Insulation System:
  - Dip and Bake Insulation system with class “H” resin up to frame 324/6HP
  - CFRI Continuous Flow Resin Impregnation Insulation system with class “H” resin for frame 364/5HP and up.
- NEMA design “B”
- Service Factor:
  - 1.25 up to 100HP
  - 1.15 from 125HP and up
- Continuous duty (S1)
- 104ºF (40ºC) ambient temperature
- Altitude: 3300 ft (1000m)
- Double Gasketed terminal box
- Stainless steel nameplate with laser etching
- Paint: Synthetic enamel alkyd resin base
- Paint Plan:
  - 207A - Frames 143HP to 215HP
  - 203A - Frames 254HP to 444/5HP
- Color: RAL 5009 - Blue
- Fitted with closed rubber drain breathers
- Regreasable bearings for frames 254/6HP and up
- Drip Cover

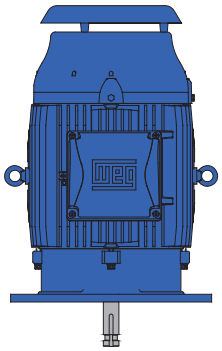

Class I, Div 2, Groups A,B,C & D
Class II, Div 2, Groups F & G
Class I, Zone 2, IIC

Inverter Ratings				
Frames	Poles	Constant Torque	Variable Torque	VFD
143HP - 444/5HP	All	20:1	1000:1	Any
	All	1000:1*		WEG

* Can only be achieved by a WEG VFD running in Sensorless Vector
See page 7.6 for details

Optional Features

- 50Hz
- Special voltages
- Special shafts
- Space heaters
- Labyrinth taconite seal available for all ratings
- Thermostats, Thermistors, RTD’s (PT100)
- Additional terminal box
- Special paint
- Shaft grounding (Aegis or WEG). Not for Hazloc.
- Insulated endbells available from 364/5HP and up
- Degree of protection: IP56, IP65, IP66
- UL Listed fire pump duty
- With feet

W22 P-Base Motors - NEMA Premium

TEFC

Rated Output		NEMA Frame	List Price	Part Number	Full Load Current		Full Load Efficiency	Shipping Weight (lbs.)	Overall Length "C" Dim. (in.)
HP	RPM				460V	575V			
1	1800	143HP	$911	PB000X04NPW22	1.41	1.13	85.5	40.8	13.421
	1200	145HP	$1,107	PB000X06NPW22	1.73	1.38	82.5	52.9	14.397
1.5	3600	143HP	$983	PB001X02NPW22	1.96	1.57	84.0	40.8	13.421
	1800	145HP	$983	PB001X04NPW22	2.02	1.62	86.5	48.5	14.397
	1200	182HP	$1,269	PB001X06NPW22	2.54	2.03	87.5	70.3	15.504
2	3600	145HP	$1,028	PB002X02NPW22	2.56	2.05	85.5	51.8	14.397
	1800	145HP	$1,007	PB002X04NPW22	2.69	2.15	86.5	50.7	14.397
	1200	184HP	$1,372	PB002X06NPW22	3.23	2.58	88.5	87.5	16.504
3	3600	182HP	$1,237	PB003X02NPW22	3.63	2.90	86.5	88.2	15.504
	1800	182HP	$1,224	PB003X04NPW22	3.91	3.13	89.5	90.4	15.504
	1200	213HP	P.O.A	PB003X06NPW22	4.41	3.53	89.5	121	18.630
5	3600	184HP	$1,477	PB005X02NPW22	5.90	4.72	88.5	88.2	16.504
	1800	184HP	$1,458	PB005X04NPW22	6.45	5.16	89.5	94.8	16.504
	1200	215HP	$2,329	PB005X06NPW22	6.83	5.46	89.5	162	20.126
7.5	3600	213HP	$2,091	PB007X02NPW22	8.76	7.01	89.5	139	18.630
	1800	213HP	$1,958	PB007X04NPW22	9.18	7.34	91.7	154	18.630
	1200	254HP	$3,016	PB007X06NPW22	9.48	7.58	91.0	262	23.723
10	3600	215HP	$2,561	PB010X02NPW22	11.6	9.28	90.2	163	20.126
	1800	215HP	$2,471	PB010X04NPW22	12.4	9.92	91.7	172	20.126
	1200	256HP	$3,928	PB010X06NPW22	12.9	10.3	91.0	289	25.455
15	3600	254HP	$3,350	PB015X02NPW22	17.2	13.8	91.0	236	23.723
	1800	254HP	$3,162	PB015X04NPW22	18.0	14.4	92.4	251	23.723
	1200	284HP	P.O.A	PB015X06NPW22HP	17.9	14.3	91.7	379	26.350
	1200	284HPH	P.O.A	PB015X06NPW22HPH	17.9	14.3	91.7	379	28.100
20	3600	256HP	$3,575	PB020X02NPW22	23.2	18.6	91.0	269	25.455
	1800	256HP	$3,452	PB020X04NPW22	24.1	19.3	93.0	291	25.455
	1200	286HP	P.O.A	PB020X06NPW22HP	24.2	19.4	91.7	426	27.845
	1200	286HPH	P.O.A	PB020X06NPW22HPH	24.2	19.4	91.7	426	29.595
25	3600	284HP	$4,895	PB025X02NPW22HP	28.5	22.8	91.7	362	26.350
	3600	284HPH	$4,895	PB025X02NPW22HPH	28.5	22.8	91.7	362	28.100
	1800	284HP	$4,863	PB025X04NPW22HP	29.5	23.6	93.6	388	26.350
	1800	284HPH	$4,863	PB025X04NPW22HPH	29.5	23.6	93.6	388	28.100
	1200	324HP	P.O.A	PB025X06NPW22	30.4	24.3	93.0	560	30.403
30	3600	286HP	$5,577	PB030X02NPW22HP	33.8	27.0	91.7	392	27.845
	3600	286HPH	$5,577	PB030X02NPW22HPH	33.8	27.0	91.7	392	29.595
	1800	286HP	$5,179	PB030X04NPW22HP	35.1	28.1	93.6	437	27.845
	1800	286HPH	$5,179	PB030X04NPW22HPH	35.1	28.1	93.6	437	29.595
	1200	326HP	P.O.A	PB030X06NPW22	35.8	28.6	93.0	628	31.897
40	3600	324HP	$7,098	PB040X02NPW22	45.8	36.6	92.4	547	30.403
	1800	324HP	$6,798	PB040X04NPW22	47.1	37.7	94.1	492	30.403
	1200	364/5HP	P.O.A	PB040X06NPW22	46.5	37.2	94.1	833	34.830
50	3600	326HP	$8,955	PB050X02NPW22	56.1	44.9	93.0	584	31.897
	1800	326HP	$8,602	PB050X04NPW22	59.2	47.4	94.5	536	31.897
	1200	364/5HP	P.O.A	PB050X06NPW22	57.4	45.9	94.1	869	34.830
60	3600	364/5HP	P.O.A	PB060X02NPW22	67.0	53.6	93.6	825	34.830
	1800	364/5HP	P.O.A	PB060X04NPW22	68.3	54.6	95.0	869	34.830
	1200	404/5HP	P.O.A	PB060X06NPW22HP	69.5	55.6	94.5	1036	38.230
	1200	404/5HPH	P.O.A	PB060X06NPW22HPH	69.5	55.6	94.5	1036	38.230
75	3600	364/5HP	P.O.A	PB075X02NPW22	81.9	65.5	93.6	847	34.830
	1800	364/5HP	P.O.A	PB075X04NPW22	84.1	67.3	95.4	919	34.830
	1200	404/5HP	P.O.A	PB075X06NPW22HP	84.9	67.9	94.5	1089	38.230
	1200	404/5HPH	P.O.A	PB075X06NPW22HPH	84.9	67.9	94.5	1089	38.230
100	3600	404/5HP	P.O.A	PB100X02NPW22HP	110	88.0	94.1	1045	38.230
	3600	404/5HPH	P.O.A	PB100X02NPW22HPH	110	88.0	94.1	1045	38.230
	1800	404/5HP	P.O.A	PB100X04NPW22HP	111	88.8	95.4	1140	38.230
	1800	404/5HPH	P.O.A	PB100X04NPW22HPH	111	88.8	95.4	1140	38.230
	1200	444/5HP	P.O.A	PB100X06NPW22	121	96.8	95.0	1577	41.350
125	3600	444/5HP	P.O.A	PB125X02NPW22	134	107	95.0	1599	41.350
	1800	444/5HP	P.O.A	PB125X04NPW22	139	111	95.4	1590	41.350
	1200	444/5HP	P.O.A	PB125X06NPW22	143	114	95.0	1751	41.350
150	3600	444/5HP	P.O.A	PB150X02NPW22	161	129	95.0	1709	41.350
	1800	444/5HP	P.O.A	PB150X04NPW22	170	136	95.8	1676	41.350

Voltage: Replace 'X' with '4' for 208-230/460V
Replace 'X' with '5' for 575V

W22 P-Base Motors - NEMA Premium

TEFC - Electrical Data

Rated Output		Full Load Speed (RPM)	NEMA Frame	Full Load Current (A)			Locked rotor current (Il/In)	Locked rotor torque	Breakdown torque	Locked rotor time (s)	Weight (lb)	Noise level	Service Factor	Efficiency (%)			Power factor		
HP	kW			230V	460V	575V								50%	75%	100%	50%	75%	100%
1	0.75	1760	143HP	2.82	1.41	1.13	8.4	280%	350%	18	40.8	51	1.25	80.0	84.0	85.5	0.60	0.70	0.78
		1150	145HP	3.46	1.73	1.38	6.2	300%	300%	28	52.9	49	1.25	77.0	82.0	82.5	0.45	0.57	0.66
1.5	1.1	3490	143HP	3.92	1.96	1.57	8.9	350%	380%	21	40.8	68	1.25	81.5	84.0	84.0	0.70	0.80	0.84
		1755	145HP	4.04	2.02	1.62	8.4	250%	340%	14	48.5	51	1.25	82.5	85.5	86.5	0.60	0.70	0.79
		1170	182HP	5.08	2.54	2.03	7.8	320%	400%	16	70.3	52	1.25	84.0	86.5	87.5	0.45	0.54	0.62
2	1.5	3475	145HP	5.12	2.56	2.05	8.9	350%	380%	17	51.8	68	1.25	82.5	85.5	85.5	0.71	0.80	0.86
		1750	145HP	5.38	2.69	2.15	8.0	260%	300%	11	50.7	51	1.25	85.5	86.5	86.5	0.62	0.74	0.81
		1165	184HP	6.46	3.23	2.58	7.5	300%	300%	31	87.5	52	1.25	86.5	88.5	88.5	0.46	0.58	0.66
3	2.2	3510	182HP	7.26	3.63	2.90	8.3	240%	380%	41	88.2	69	1.25	82.5	86.5	86.5	0.75	0.84	0.88
		1760	182HP	7.82	3.91	3.13	8.1	230%	340%	23	90.4	56	1.25	87.5	88.5	89.5	0.61	0.73	0.79
		1170	213HP	8.82	4.41	3.53	7.0	200%	280%	58	121	55	1.25	86.5	88.5	89.5	0.50	0.63	0.70
5	3.7	3500	184HP	11.8	5.90	4.72	7.6	230%	350%	25	88.2	69	1.25	86.5	88.5	88.5	0.76	0.85	0.89
		1755	184HP	12.9	6.45	5.16	7.2	230%	320%	15	94.8	56	1.25	88.5	89.5	89.5	0.62	0.74	0.80
		1170	215HP	13.7	6.83	5.46	6.8	170%	260%	57	162	55	1.25	88.5	89.5	89.5	0.58	0.70	0.76
7.5	5.5	3520	213HP	17.5	8.76	7.01	7.2	210%	300%	27	139	72	1.25	87.5	89.5	89.5	0.75	0.84	0.88
		1765	213HP	18.4	9.18	7.34	7.1	220%	310%	20	154	58	1.25	89.5	91.0	91.7	0.66	0.76	0.82
		1175	254HP	19.0	9.48	7.58	6.8	250%	300%	30	262	59	1.25	89.5	90.2	91.0	0.63	0.74	0.80
10	7.5	3515	215HP	23.2	11.6	9.28	6.9	210%	290%	24	163	72	1.25	89.5	90.2	90.2	0.79	0.87	0.90
		1765	215HP	24.8	12.4	9.92	6.4	200%	300%	17	172	58	1.25	91.0	91.7	91.7	0.66	0.77	0.83
		1175	256HP	25.8	12.9	10.3	6.5	230%	280%	26	289	59	1.25	90.2	91.0	91.0	0.63	0.74	0.80
15	11	3530	254HP	34.4	17.2	13.8	6.7	220%	270%	25	236	72	1.25	89.5	91.0	91.0	0.77	0.85	0.88
		1765	254HP	36.0	18.0	14.4	6.4	230%	270%	17	251	64	1.25	91.0	91.7	92.4	0.68	0.78	0.83
		1175	284HP	35.8	17.9	14.3	6.4	230%	270%	20	379	59	1.25	91.0	91.7	91.7	0.69	0.80	0.84
		1175	284HPH	35.8	17.9	14.3	6.4	230%	270%	20	379	59	1.25	91.0	91.7	91.7	0.69	0.80	0.84
20	15	3520	256HP	46.4	23.2	18.6	6.1	200%	240%	21	269	72	1.25	91.0	91.7	91.0	0.82	0.87	0.89
		1765	256HP	48.2	24.1	19.3	6.5	230%	270%	15	291	64	1.25	91.7	92.4	93.0	0.68	0.79	0.84
		1175	286HP	48.4	24.2	19.4	6.2	230%	260%	16	426	59	1.25	91.0	91.7	91.7	0.70	0.80	0.85
		1175	286HPH	48.4	24.2	19.4	6.2	230%	260%	16	426	59	1.25	91.0	91.7	91.7	0.70	0.80	0.85
25	18.5	3535	284HP	57.0	28.5	22.8	6.3	200%	250%	17	362	72	1.25	91.0	91.7	91.7	0.82	0.87	0.89
		3535	284HPH	57.0	28.5	22.8	6.3	200%	250%	17	362	72	1.25	91.0	91.7	91.7	0.82	0.87	0.89
		1765	284HP	59.0	29.5	23.6	6.2	240%	270%	24	388	64	1.25	92.4	93.0	93.6	0.70	0.80	0.84
		1765	284HPH	59.0	29.5	23.6	6.2	240%	270%	24	388	64	1.25	92.4	93.0	93.6	0.70	0.80	0.84
		1180	324HP	60.8	30.4	24.3	6.2	210%	260%	26	560	62	1.25	91.7	93.0	93.0	0.65	0.77	0.82
30	22	3535	286HP	67.6	33.8	27.0	6.3	200%	250%	15	392	72	1.25	91.7	91.7	91.7	0.82	0.87	0.89
		3535	286HPH	67.6	33.8	27.0	6.3	200%	250%	15	392	72	1.25	91.7	91.7	91.7	0.82	0.87	0.89
		1765	286HP	70.2	35.1	28.1	6.1	240%	240%	20	437	64	1.25	93.0	93.0	93.6	0.70	0.80	0.84
		1765	286HPH	70.2	35.1	28.1	6.1	240%	240%	20	437	64	1.25	93.0	93.0	93.6	0.70	0.80	0.84
		1180	326HP	71.6	35.8	28.6	6.2	230%	260%	21	628	62	1.25	91.7	93.0	93.0	0.65	0.77	0.83
40	30	3555	324HP	91.6	45.8	36.6	6.3	230%	240%	22	547	78	1.25	91.7	92.4	92.4	0.82	0.87	0.89
		1770	324HP	94.2	47.1	37.7	6.1	220%	240%	20	492	66	1.25	93.6	94.1	94.1	0.72	0.80	0.85
		1185	364/5HP	93.0	46.5	37.2	6.4	200%	240%	21	833	66	1.25	93.6	93.6	94.1	0.73	0.82	0.86
50	37	3550	326HP	112	56.1	44.9	6.2	220%	230%	23	584	78	1.25	93.0	93.0	93.0	0.83	0.87	0.89
		1775	326HP	118	59.2	47.4	6.2	230%	270%	15	536	66	1.25	93.0	94.1	94.5	0.66	0.77	0.83
		1180	364/5HP	115	57.4	45.9	6.4	200%	240%	18	869	66	1.25	93.6	94.1	94.1	0.74	0.83	0.86
60	45	3560	364/5HP	134	67.0	53.6	6.6	200%	260%	14	825	79	1.25	91.7	93.0	93.6	0.81	0.88	0.90
		1775	364/5HP	137	68.3	54.6	6.6	240%	260%	15	869	67	1.25	94.1	94.5	95.0	0.75	0.83	0.87
		1185	404/5HP	139	69.5	55.6	6.4	200%	230%	20	1036	68	1.25	94.1	94.5	94.5	0.74	0.82	0.86
		1185	404/5HPH	139	69.5	55.6	6.4	200%	230%	20	1036	68	1.25	94.1	94.5	94.5	0.74	0.82	0.86
75	55	3555	364/5HP	164	81.9	65.5	6.7	200%	260%	10	847	79	1.25	92.4	93.6	93.6	0.83	0.88	0.90
		1775	364/5HP	168	84.1	67.3	6.4	240%	260%	14	919	67	1.25	94.5	95.0	95.4	0.73	0.82	0.86
		1180	404/5HP	170	84.9	67.9	6.4	200%	230%	17	1089	68	1.25	94.1	94.5	94.5	0.74	0.83	0.86
		1180	404/5HPH	170	84.9	67.9	6.4	200%	230%	17	1089	68	1.25	94.1	94.5	94.5	0.74	0.83	0.86
100	75	3545	404/5HP	220	110	88.0	6.5	200%	240%	14	1045	79	1.25	93.0	94.1	94.1	0.85	0.90	0.91
		3545	404/5HPH	220	110	88.0	6.5	200%	240%	14	1045	79	1.25	93.0	94.1	94.1	0.85	0.90	0.91
		1775	404/5HP	222	111	88.8	7.3	240%	260%	13	1140	68	1.25	95.0	95.0	95.4	0.77	0.84	0.88
		1775	404/5HPH	222	111	88.8	7.3	240%	260%	13	1140	68	1.25	95.0	95.0	95.4	0.77	0.84	0.88
		1185	444/5HP	242	121	96.8	6.2	220%	260%	20	1577	69	1.25	94.5	95.0	95.0	0.68	0.78	0.82
125	90	3570	444/5HP	268	134	107	6.6	200%	250%	29	1599	81	1.15	93.6	94.5	95.0	0.82	0.87	0.89
		1780	444/5HP	278	139	111	6.5	200%	230%	27	1590	73	1.15	95.0	95.4	95.4	0.74	0.82	0.85
		1185	444/5HP	286	143	114	6.4	210%	240%	19	1751	69	1.15	95.0	95.4	95.0	0.70	0.79	0.83
150	110	3570	444/5HP	322	161	129	6.5	180%	240%	22	1709	81	1.15	94.1	95.0	95.0	0.83	0.88	0.90
		1780	444/5HP	340	170	136	6.6	200%	250%	27	1676	73	1.15	95.4	95.8	95.8	0.74	0.82	0.85

W22 P-Base Motors - NEMA Premium

TEFC - Mechanical Data

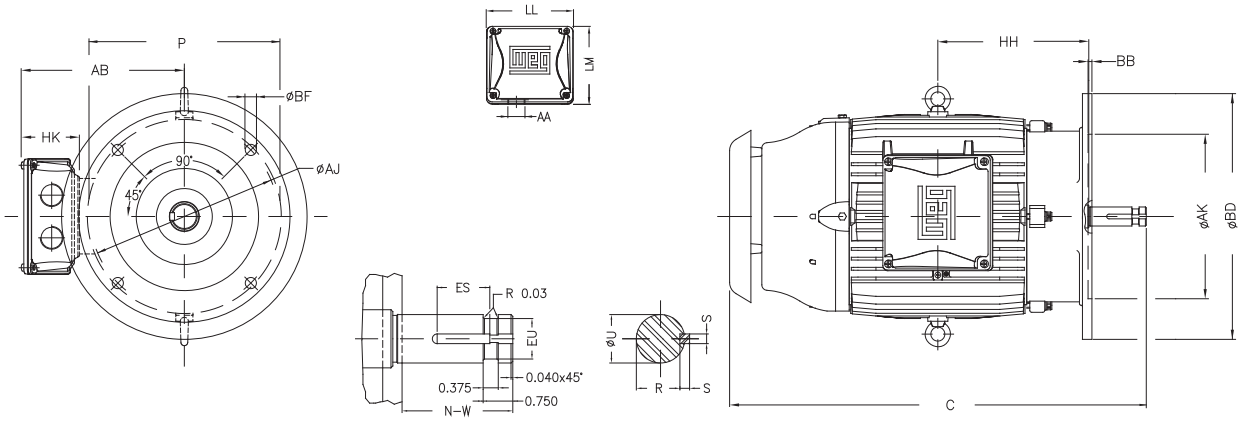

NEMA FRAMES	# of Poles	P	AB	AH	U	N-W	ES	EU	S	R	HH	HK	C	LL	LM	AA	Bearing D.E.	Bearing N.D.E	Flange AJ	Flange AK	Flange BD	Flange BF	Flange BB
143HP	2	7.047	6.260	2.750	0.875	2.874	1.250	0.687	0.187	0.765	4.250	2.638	13.421	4.528	4.094	NPT 3/4"	6307 ZZ	6204 ZZ	9.125	8.250	10.000	0.433	0.196
143HP	4/6/8																						
145HP	2										4.750		14.397										
145HP	4/6/8																						
182HP	2	8.740	7.565	2.750	1.125	2.953	1.250	0.875	0.250	0.984	5.000	3.150	15.504	5.512	5.236	NPT 1"	6308 ZZ	6206 ZZ					
182HP	4/6/8																						
184HP	2										5.500		16.504										
184HP	4/6/8																						
213HP	2	10.630	8.583								6.250		18.630				6309 ZZ	6207 ZZ					
213HP	4/6/8																						
215HP	2										7.000		20.126										
215HP	4/6/8																						
254HP	2	12.283	10.483								8.376	3.976	23.723	7.815	7.480	NPT 1 1/2"	6311 C3	6209 C3					
254HP	4/6/8																						
256HP	2										9.250		25.455										
256HP	4/6/8																						
284HP	2	14.094	11.073								9.500		26.350				6312 C3	6211 C3					
284HP	4/6/8																						
284HPH	2			4.500	1.625	4.764	3.150	1.250	0.375	1.415			28.100				6314 C3		14.750	13.500	16.500	0.687	0.250
284HPH	4/6/8																						
286HP	2			2.750	1.125	2.953	1.250	0.875	0.250	0.984	10.250		27.845				6312 C3		9.125	8.250	10.000	0.433	0.196
286HP	4/6/8																						
286HPH	2			4.500	1.625	4.764	3.150	1.250	0.375	1.415			29.595				6314 C3		14.750	13.500	16.500	0.687	0.250
286HPH	4/6/8																						
324HP	2	15.591	12.575								10.500	4.705	30.403	9.055	8.661	NPT 2"		6212 C3					
324HP	4/6/8																						
326HP	2										11.250		31.897										
326HP	4/6/8																						
364/5HP	2	17.794	16.016			4.748					12.362	6.024	34.830	10.591	11.267	NPT 3"	6316 C3	6314 C3					
364/5HP	4/6/8																						
404/5HP	2	19.134									14.213		38.230										
404/5HP	4/6/8																						
404/5HPH	2				2.125			1.750	0.500	1.844													
404/5HPH	4/6/8																						
444/5HP	2	23.583	18.570								15.748	5.970	41.350	12.362	12.283	2xNPT 3"							
444/5HP	4/6/8																6319 C3	6316 C3					